Part of Energy Queensland

Substation Standard

Standard for Clearances in Air (STNW3013)

These standards created and made available are for the construction of Energy Queensland infrastructure. These standards ensure meeting of Energy Queensland's requirements. External companies should not use these standards to construct non-Energy Queensland assets.

If this standard is a printed version, to ensure compliance, reference must be made to the Energy Queensland internet site www.energyq.com.au to obtain the latest version.

Approver	Carmelo Noel - General Manager Asset Standards	
If RPEQ Sign-off required insert details below.		
Certified Person Name and Position Title		Registration Number
John Lansley - Manager Substation Standards		RPEQ 06371

This standard specifies the minimum clearances required for air-insulated equipment with rated insulation level as adopted by Energy Queensland.

Keywords: SS-1-3.1, Clearance, AS 2067, Exclusion zone, Non-flashover distance, Authorised person, STNW3013

CONTENTS

1 Overview 4
1.1 Purpose 4
1.2 Scope 4
2 References 4
2.1 Legislation, Regulations, Rules, and Codes 4
2.2 Controlled Documents 5
2.3 Other Documents 5
2.4 Other Sources 5
3 Definitions and Abbreviations 5
3.1 Definitions 5
3.2 Abbreviations 7
4 Insulation and Withstand Values 8
4.1 General 8
4.2 Selection of Insulation Level 8
4.3 Verification of Withstand Values 9
4.4 Type Tested Equipment 9
5 Minimum Clearances 9
5.1 General 9
5.2 Design Clearances 10
5.3 Safety Clearances 10
5.4 Design and Safety Clearances for Operational Purposes and Maintenance Work 11
5.5 Adopted Exclusion Zones 11
5.6 Clearances to Boundary Fences and Internal Protective Barriers and Obstacles 11
5.7 Clearances Over Boundary Fences for Overhead Conductors 12
5.8 Clearances to Internal Vehicle Access 12
5.9 Bay and Busbar Spacing 13
5.10 Ground Clearances to Terminations 13
6 Design and Safety Clearances 15
7 Design Considerations 16
7.1 Summary of Design Procedures for Applying Safety Clearances 16
7.2 Design Steps to be Considered for New Installations 17
Annex A 19
Illustrations Adapted from AS 2067–1984 and AS 2067-2016 EESS-10202-10 19
A.1 Dimensions of Tall Operator - Figure G1, AS 2067–1984 19
A.2 Work Sections in Single Busbar Installation - Figure G5, AS 2067–1984 20

A.3 Work Sections in Duplicate Busbar Installation - Figure G6, AS 2067–1984 21
A.4 Minimum Approach Distance for Transport in Transit - Figure 5.2, AS 2067–2016 22
A.5 Minimum Approach Distance for Transport in Transit - Figure 5.3, AS 2067–2016 23
A.6 Protection Against Direct Contact by Protective Barriers/Screens – Figure 5.4, AS 2067-2016 24
A.7 Protection Against Direct Contact by Protective Barriers/Screens – Figure 5.5, AS 2067-2016 25
A.8 Protection Against Direct Contact by Protective Obstacles - Figure 5.6, AS 2067–2016 26
A.9 Boundary Distances and Minimum Height at the External Fence/Wall – Figure 5.7, AS 2067-2016 27
A.10 Minimum Heights and Minimum Working Clearances – Figure 5.8, AS 2067-2016 28
Annex B 29
Changes to Exclusion Zones 29
Annex C 30
Frequently Asked Questions 30
C.1 Do I need to bring an existing site into line with this standard? 30
C.2 What do I do when replacing an item of plant in a bay where this standard is not achieved? 30
C.3 The CB Pole spacing doesn't meet the standard, can I still use it? 31
Annex D 32
Revision History 32

FIGURES

Figure 1: Ground Clearances to Terminations 14
Figure 2: Bus Extension to an Existing Site 30

TABLES

Table 1: Clearances Above Boundary Fences 12
Table 2: Design and Safety Clearances 15
Table 3: Bay and Busbar Spacing 16

1 Overview

1.1 Purpose

This standard specifies and describes the application of the minimum design and safety clearances in air required for substation installations.

1.2 Scope

This standard is intended to apply to new substations and refurbishment projects. It includes the minimum clearances for:

- Air-insulated equipment based on chosen insulation level.
- Safety purposes for open-type switchgear assemblies - indoors and outdoors.
- Bay centres, phase centres and busbar heights.
- Protective barriers, protective obstacles, boundaries, and fences.
- Operational purposes, maintenance work and vehicle access.

It excludes:

- Existing installations established under previously accepted standards and practices that do not present safety hazards if retained. For example, a new feeder bay at an existing substation shall be built to this standard, but the existing bus sections and feeder bays should not be modified unless neglecting them presents a safety hazard.
- Primary plant and equipment clearances designed to different standards or manufacturer type testing as specified by Energy Queensland.
- Installations under special conditions as defined within the Substation Standard for Climate and Natural Hazard Resilience - 3057510 (STNW3007).
- Sites accessible to those not satisfying the authorised person definition of Section 4.1.

2 References

2.1 Legislation, Regulations, Rules, and Codes

This document refers to the following:

Queensland Electrical Safety Regulation, 2013 (Queensland Government)

Queensland Electricity Safety Act, 2002 (Queensland Government)

Queensland Electricity Act, 1994 (Queensland Government)

Queensland Electricity Regulation, 2006 (Queensland Government)

Queensland Work Health and Safety Act, 2011 (Queensland Government)

Queensland Work Health and Safety Regulation, 2011 (Queensland Government)

2.2 Controlled Documents

Document	Alternative Doc ID
Standard for Climate and Natural Hazard Resilience - 3057510	STNW3007
Standard for Conductor Clearance Prioritisation and Remediation – 3058520	STNW3399

2.3 Other Documents

Primary Plant Standard (STNW3015)

2.4 Other Sources

AS 1931.1, 1996, Standards Australia, High Voltage Test Techniques - Part 1: General definitions and test requirements

AS 2067, 2016, Standards Australia, Switchgear assemblies and ancillary equipment for alternating voltages above 1kV

AS 2067, 2016 Standards Australia, Substations and high voltage installations exceeding 1kV a.c.

AS 60038, 2012 Standards Australia, Standard Voltage

AS 62271.1, 2017, Standards Australia, High-Voltage Switchgear and Controlgear – Part 1: Common specifications for alternating current switchgear and control gear

IEC 60071-1:2019, IEC, Insulation co-ordination - Part 1: Definitions, principals, and rules

IEC 60071-2:2023, IEC, Insulation co-ordination - Part 2: Application guidelines

3 Definitions and Abbreviations

3.1 Definitions

For the purposes of this standard, the following definitions apply.

Authorised person	For an electric line, means a person who— (a) has enough technical knowledge and experience to do work that involves contact with, or being near to, the electric line; and (b) has been approved by the person in control of the electric line to do work that involves contact with, or being near to, the electric line, or is authorised to act for the person in control of the electric line. (Queensland Electrical Safety Regulation, 2013)
Boundary clearance	The smallest permissible clearance between an external fence and live parts or those parts that may be subject to a hazardous voltage. (AS 2067, 2016)
Bund	An embankment or wall that may form part or all of the perimeter of a compound. (AS 2067, 2016)
Busbar	In a substation, the assembly necessary to make a common connection for several circuits. (AS 2067, 2016)

Clearance	Distance between two conductive parts along a string stretched the shortest way between these conductive parts (the taught string distance). (AS 2067, 2016)
Danger zone	Area limited by the non-flashover distance (N) around live parts that are without complete protection against direct contact. Note: Infringing the danger zone is considered the same as touching live parts. (AS 2067, 2016)
Exclusion zone	For a person or an electric part, or for operating plant or a vehicle. The distance to be observed from the person, plant, or vehicle to normally exposed live parts. The distances are defined in Schedule 2: Exclusion zones for overhead electric lines (Queensland Electrical Safety Regulation, 2013). Also refer to 'Working clearance.'
Exposed conductive part	Conductive part of equipment that can be touched and that is not normally live, but which can become live when basic insulation fails. (AS 2067, 2016)
Highest voltage for installation (U_m)	Highest r.m.s. value of phase-to-phase voltage for which the installation is designed in respect of its insulation. (AS 2067, 2016)
Installations of enclosed design	Installations where the equipment has protection against direct contact. (AS 2067, 2016)
Installations of open design	Installations where the equipment does not have protection against direct contact. (AS 2067, 2016)
Live part	Conductor or conductive part intended to be energized in normal operation, including a neutral conductor but by convention not a PEN conductor or PEM conductor or PEL conductor. (AS 2067, 2016)
Minimum phase-to-earth clearance	Smallest permissible clearance in air between live parts and earth or between live parts and parts at earth potential. The clearances to earth between live parts and earthed material apply to any structure or surface substantially at earth potential, including any fixed or portable screens which may be provided. Earthed material includes a poor conductor such as concrete. (AS 2067, 2016)
Minimum phase-to-phase clearance	Smallest permissible clearance in air between live parts of different phases or between the same phase that are electrically separated from each other. (AS 2067, 2016)
Nominal voltage of a system (U_n)	A suitable approximate value of voltage used to designate or identify a system. (IEC 60071-1:2019) Suitable approximate value of r.m.s phase-to-phase voltage used to designate or identify a system. (AS 2067, 2016)
Protection against direct contact	Measures that prevent persons coming into hazardous proximity to live parts or those parts that could carry a hazardous voltage, with parts of their bodies or objects (reaching the danger zone). (AS 2067, 2016)
Protection in case of indirect contact	Protection of persons from hazards that could arise, in the event of a fault, from contact with exposed conductive parts of electrical equipment or extraneous conductive parts. (AS 2067, 2016)

Protective barrier	Part providing protection against direct contact from any usual direction of access. (AS 2067, 2016)
Protective barrier clearance	Smallest permissible clearance between a protective barrier and live parts or those parts that may become live subject to a hazardous voltage. (AS 2067, 2016)
Protective obstacle	Part preventing unintentional access to an area where safety clearances will be infringed, but not preventing access to this area by deliberate action. (AS 2067, 2016)
Protective obstacle clearance	Smallest permissible clearance between a protective obstacle and live parts or those parts that may become live subject to a hazardous voltage. (AS 2067, 2016)
Rated insulation level	A set of standards withstand voltages which characterize the dielectric strength of the insulation. (IEC 60071-1:2019)
Taut string distance	The distance between two parts measured along a taut string stretched the shortest way between those parts. (AS 2067, 2016)
Work section	A defined space where a person can work safely provided that some part of the person always remains within that space. (AS 2067, 2016)
Working clearance	Minimum safe distance to be observed between normally exposed live parts and any person working in a high voltage installation or any conductive tool (or object) directly handled. Also refer to 'Exclusion zone'. (AS 2067, 2016)

3.2 Abbreviations

This list does not include well-known unambiguous abbreviations, or abbreviations defined at their first occurrence within the text.

G	Ground safety clearance - The minimum distance required between the earthed end of any exposed insulator carrying or containing live parts and ground or the floor of permanent walkways used for normal inspection and operational functions. This distance is equivalent to the reach of a person at ground level (2440mm), which includes an allowance of 300mm for tools. (AS 2067, 2016)
H	Horizontal work safety clearance - The minimum distance measured horizontally between live parts and the work object. Where work is to be carried out from a ladder, the horizontal work safety clearance is applied from extremities of the work object horizontally to the nearest live parts. This distance includes an allowance of 300mm for tools. (AS 2067, 2016)
HV	High voltage - Voltage exceeding 1000 V a.c. (AS 2067, 2016)
LIWV	Lightning Impulse Withstand Voltage - Rated lightning impulse withstand voltage U_p 1.2/50 µs kV peak. (AS 2067, 2016)
LV	Low voltage - Voltage exceeding 50 V a.c. but not exceeding 1000 V a.c. (AS 2067, 2016)

N	Non-flashover distance - The minimum phase to earth clearance that includes a margin of 10% (for clearances of 1300 mm or less) and 6% (for clearances of greater than 1300 mm) to allow for variations in construction dimensions. (AS 2067, 2016)
PFWV	Power Frequency Withstand Voltage - Rated short duration power frequency withstand voltage U_d kV r.m.s. (AS 2067, 2016)
S	Section safety clearance - Safety clearance required for access for operational purposes. The non-flashover distance (N) plus the ground safety clearance (G) measured along a taught string between the ground or operating platform and the live plant. (AS 2067, 2016)
SIWV	Switching Impulse Withstand Voltage - Rated switching impulse withstand voltage U_s Phase-to-earth 250/2500 µs kV peak. (AS 2067, 2016)
V	Vertical work safety clearance - The minimum distance measured vertically between live parts and the highest part of the work object. Where work is to be carried out from a ladder, the vertical work safety clearance shall be applied from the highest parts of the work object vertically to the nearest live parts. This distance includes an allowance of 300 mm for tools. (AS 2067, 2016)

4 Insulation and Withstand Values

4.1 General

As conventional (air-insulated) installations are normally not impulse tested, substations (the installation) require minimum clearances between live parts and earth and between live parts of phases in order to avoid flashover below the impulse withstand level selected for the installation.

Minimum phase-to-phase and phase-to-earth clearances required are based on (AS 2067, 2016) Tables 3.1 and 3.2.

Insulation coordination shall be in accordance with IEC 60071-1 and 2 relates values for the highest voltage for equipment Um to rated lightning impulse withstand voltages as well as rated short-duration power-frequency withstand voltages or rated switching impulse withstand voltages. Standard nominal voltages are also given in (AS 60038, 2012).

4.2 Selection of Insulation Level

4.2.1 General

The insulation level shall be chosen according to the established highest voltage for equipment U_m and/or impulse withstand voltage. The chosen insulation level shall be as per the primary plant rating standard (STNW3015, 2007)

4.2.2 Consideration of Methods of Neutral Earthing

To ensure reliability in service, take into account the method of neutral earthing in the system and the characteristics and locations of overvoltage limiting devices to be installed. A neutral earthing system can increase the phase to earth voltage under fault conditions.

Where it is appropriate to change the insulation level based neutral earthing system and surge arrestor location standard insulation values shall be used.

4.2.3 Consideration of Rated Withstand Voltages

In the voltage Range I (1 kV < Um ≤ 245 kV) the choice shall be based on the rated lightning impulse withstand voltages and the rated short-duration power-frequency withstand voltages of Table 3.1.

In the voltage Range II (Um > 245 kV) the choice shall be based on the rated switching impulse withstand voltages (SIWV) and the rated lightning impulse withstand voltages given in Tables 3.1 or 3.2 for rod to structure and conductor to structure geometry respectively.

4.3 Verification of Withstand Values

If the minimum clearances in air given in Tables 3.1 and 3.2 (AS 2067, 2016) are maintained, it is not necessary to apply dielectric tests to the airgap.

The minimum design clearances of Table 2 shall be applied to ensure withstand testing of installation is not required.

4.4 Type Tested Equipment

For type tested equipment, the minimum clearances according to (AS 2067, 2016) Tables 3.1 and 3.2 need not be maintained because the ability to withstand the test voltage is established by a dielectric type test. Information on mounting and service conditions supplied by the manufacturer shall be observed on-site.

5 Minimum Clearances

5.1 General

The Energy Queensland power distribution network has parts with nominal system voltages ranging from 11 kV to 220 kV. These voltages are included voltage range I (1 kV < Um ≤ 245 kV) consequently this standard is based on the values from AS2067 Table 3.1.

The clearances shown in Table 2 use nominal voltage levels and are the minimum necessary to ensure that the assemblies will not flashover if subjected to the specified impulse voltage.

Where vermin, wildlife or other environmental factors are likely to present a hazard, the minimum clearances should be increased. If the minimum clearances cannot be obtained, insulated conductors, bushing and insulator shrouding should be used. When fitting portable earth terminals to equipment, the required clearances shall be maintained.

All section clearances shall be considered and measured from all points on the live parts' supporting structure foundation and any accessible surface.

5.1.1 Minimum Clearances in Voltage Range I (1kV < Um ≤ 245kV) AS2067 Table 3.1

In voltage Range I the clearances in air are determined by the rated Lighting Impulse Withstand Voltages (LIWV). In the voltage Range I (see (AS 2067, 2016) Table 3.1), the minimum clearances in air are based on unfavourable electrode configurations with small radii of curvature (that is rod-plate or rod structure).

For voltages up to and including 245 kV (Range I), the minimum clearances in air between phases or between conductors of the same phase separable electrically from each other, are 15% greater

than the corresponding Ph-E minimum clearances in Table 3.1 (refer to (AS 2067, 2016) Clause 3.4.2 and (IEC 60071-1:2019)

The higher values shown in Table 3.1 have been adopted due to zone substations being exposed to higher than normal overvoltages; a higher level of safety and withstand is required.

The clearances in air for voltages above 245kV are determined by the rated Switching Impulse Withstand Voltages (SIWV) refer to Table 3.2 (AS 2067, 2016)

5.1.2 Disconnector Clearances

If parts of an installation can be separated from each other by a disconnector, the parts shall be tested at the rated impulse withstand voltage for the isolating distance (see (AS 62271.1, 2017)). If between such parts of an installation the minimum phase-to-phase clearances of Table 3.1 for Range I, and Table 3.2 for Range II, in this Standard are increased by 25% or more, it is not necessary to apply dielectric tests.

5.2 Design Clearances

Design clearances are the minimum clearances required between live parts and earth and between live parts of phases in order to avoid flashover of the air-insulated substations at the chosen insulation level.

Design clearances are intended to be used to design outdoor and indoor open substation installations without the need to verify the withstand values by applying dielectric tests to air-gaps.

If these design clearances are not maintained the zone substation will require dielectric tests to be performed to verify the withstand voltage selected as per Section 5.3.

5.3 Safety Clearances

Safety clearances are dependent upon the design clearances chosen, and are the minimum clearances required between personnel, vehicles, mobile plant, equipment, and control buildings to prevent unintentional touching of live parts or unintentional reaching into a dangerous zone near live parts.

Safety clearances are intended to be used to design outdoor and indoor open substation installations to restrict access to danger zones, taking into account the need for operational and maintenance access.

External fences shall be provided and where safety clearances cannot be maintained, permanent protective facilities shall be installed. Recognised protection types include protection by enclosure, protection by barrier, protection by obstacle and protection by placing out of reach.

A separation shall be provided between bays or sections by appropriate distances, protective barriers or protective obstacles. Temporary barriers or obstacles may be installed to achieve the required safety clearances under maintenance conditions.

Safety clearances for maintenance shall consider how work is undertaken including directions of movement and the use of ladders or working platforms. The design of the installation shall allow work sections to be established when maintenance work is to be carried out.

These work safety clearances are related to the dimensions of a tall person using light hand tools or materials up to 300 mm in length. Where larger tools or equipment are to be used, an appropriate provision shall be made in the work safety clearances. Refer to Annex A.

5.4 Design and Safety Clearances for Operational Purposes and Maintenance Work

The design and safety clearances in Table 2 are the minimum clearances that shall be permitted in design to ensure compliance with (AS 2067, 2016) and (Queensland Electrical Safety Regulation, 2013).

The design clearances shall include the minimum phase-to-phase and non-flashover values of Table 2, selected from (AS 2067, 2016), Table 3.1. The higher values shown in Table 3.1 have been adopted due to zone substations being exposed to higher than normal overvoltages; a higher level of safety and withstand is required.

The safety clearances for operational purposes and maintenance work in Table 2 shall be maintained for all such activities undertaken within Energy Queensland substations. Consideration should be applied to (AS 2067, 2016), Section 3.5, where parts of an installation may be subject to phase opposition, where the insulation levels differ, and wind or short circuits can influence conductor swing.

The application of these clearances shall be in accordance with Figures 5.2 to 5.8 of (AS 2067, 2016). Refer to Annex A.

The safety sections were determined according to the typical extreme workman dimensions of Figure G1, of (AS 2067, 2016). Refer to Annex A.

Transformer bund walls and fixtures that may be stood on shall be considered to ensure that the required clearances from the top of the object to live parts are maintained using the taught string method.

5.5 Adopted Exclusion Zones

Exclusion zones adopted by Energy Queensland add the largest values of either the (Queensland Electrical Safety Regulation, 2013) exclusion zones or the (AS 2067, 2016) Table 3.1 non-flashover distances. This is to ensure the safety clearances in Table 2 comply with both standards and statutory regulations.

Exclusion zones adopted by Energy Queensland for nominal voltage levels up to and including 66 kV align with those from the (Queensland Electrical Safety Regulation, 2013). The exclusion zone ranges stated in the (Queensland Electrical Safety Regulation, 2013) relate to nominal phase-to-phase voltages. Each exclusion zone range is inclusive of the upper voltage level.

For greater nominal voltage levels, the exclusion zones adopted by Energy Queensland align with those from (AS 2067, 2016) Table 3.1 non-flashover distances.

5.6 Clearances to Boundary Fences and Internal Protective Barriers and Obstacles

Boundary fences/walls shall be constructed in accordance with Section 5.2.8: External fences or walls and access doors of (AS 2067, 2016). The external fence/wall shall be at least 2500 mm high and the lower edge shall not be more than 50 mm from the ground.

Horizontal boundary clearances shown in Table 2 are the minimum clearances between bare live parts and substation boundary fences shall be in accordance with Figure 5.7 of (AS 2067, 2016).

Protective barriers and obstacles shall be applied where the ground and section safety clearances are not met.

The design of a protective barrier shall provide protection against direct contact from any usual direction of access. The barrier shall be a solid wall, door, or screen with a minimum height of 1800mm which ensures no part of the body enters the exclusion zones near live parts.

The positioning of permanent protective barriers installed within the boundary fence to restrict the access of persons to the live parts shall be in accordance with Figure 5.4, Figure 5.5, and Figure 5.7 of (AS 2067, 2016). Refer to Annex A.

The design of a protective obstacle shall prevent unintentional access to an area where the safety clearances will be infringed. Obstacles should not prevent the intentional access, but direct persons away from the area and be labelled such to their purpose.

The positioning of protective obstacles installed within the boundary fence to restrict the access of persons to live parts shall be in accordance with Figure 5.6 and Figure 5.7 of (AS 2067, 2016). Refer to Annex A.

5.7 Clearances Over Boundary Fences for Overhead Conductors

5.7.1 New Installations

Fence clearances for new installations shall be designed to the requirements of Standard for Conductor Clearance Prioritisation and Remediation – 3058520 (STNW3399) and the Electrical Safety Regulations:

5.7.2 Existing Installations - Brick fence that an intruder may stand on

In this case, as per the platform example in Figure 5.8 of AS2067, the clearance between the top of the brick wall that can be stood on (excluding barbed wire) and live parts under maximum sag conditions shall be no less than Section Clearance S, which is for electrically skilled or instructed persons. It takes account an intruder that may enter a substation being outside danger zone N even if climbing with hands in the air

5.7.3 Existing Installations - Chain wire, palisade or timber fence that can't be stood on

In these situations where the fence cannot be stood on, then the action to be assessed against is an instructed person working on the top wire. In this case vertical work safety clearance V shall apply as per Figure 5.8 of AS2067:2016 (see A.10). This includes the electric fence where this is higher than the boundary fence.

5.7.4 Summary

Table 1: Clearances Above Boundary Fences

		<1000V	11kV	22kV	33kV	66kV	110kV	132kV	220kV
New	Stand	3.7m	3.7m	3.7m	3.7m	4.6m	4.6m	4.6m	6.0m
	Non-stand	2.7m	3.0m	3.0m	3.0m	3.0m	4.6m	4.6m	5.5m
Exist	Stand		3.14m	3.14m	3.14m	3.44m	3.65m	3.87m	4.665m
	Non-stand		2.04m	2.04m	2.04m	2.34m	2.55m	2.77m	3.565m

5.8 Clearances to Internal Vehicle Access

Transport routes, their load capacity, height, and width shall be adequate for movements of plant and equipment during both construction and operation. Consideration should be given to the loading and unloading of the largest anticipated loads, such as power transformers.

The horizontal clearances between the kerb line on either side of the internal vehicle access and live parts or insulators shall be at least equal to the horizontal working distance in accordance with Figure 5.3 of (AS 2067, 2016). Refer to Annex A.

The vertical clearance between an access roadway surface and any live conductor shall be at least the “Vertical clearance from road” given in Schedule 4: Clearance of overhead electric lines (other than low voltage service lines) - Part 3: High voltage conductor clearance – from ground, (Queensland Electrical Safety Regulation, 2013) and highlighted within Table 2.

Mobile plant or equipment capable of height alteration such as Elevated Working Platforms, shall at all times maintain the taught string section safety clearance of Table 2 between the work platform and live parts in accordance with Figure 5.3 of (AS 2067, 2016). Refer to Annex A.

The vertical clearance for a vehicle where the operator must remain in the cab on an undesignated roadway shall be as per Figure 5.2 of (AS 2067, 2016). Refer to Annex A.

5.9 Bay and Busbar Spacing

The spacing shown in Table 3 are such that the electrical and safety clearances specified in Table 2 can be achieved, with due allowance being made for the possibility of infringement of the minimum electrical clearances by vermin or birds.

The clearances shall be applied in accordance with Figure G5 and Figure G6 of (AS 2067, 2016). Refer to Annex A.

5.10 Ground Clearances to Terminations

The ground clearance (G) shall be achieved for any unearth parts of the HV installation. This includes all bushings, insulators, cable terminations and unscreened cabled. For cable terminations the measurement is to be taken to where the earth screen breaks out (typically where the cable termination jacketing begins).

The top of all bushings, insulators and cable earth screens is considered a live part and all appropriate clearances shall be achieved, this includes but is not limited to section, vertical and horizontal.

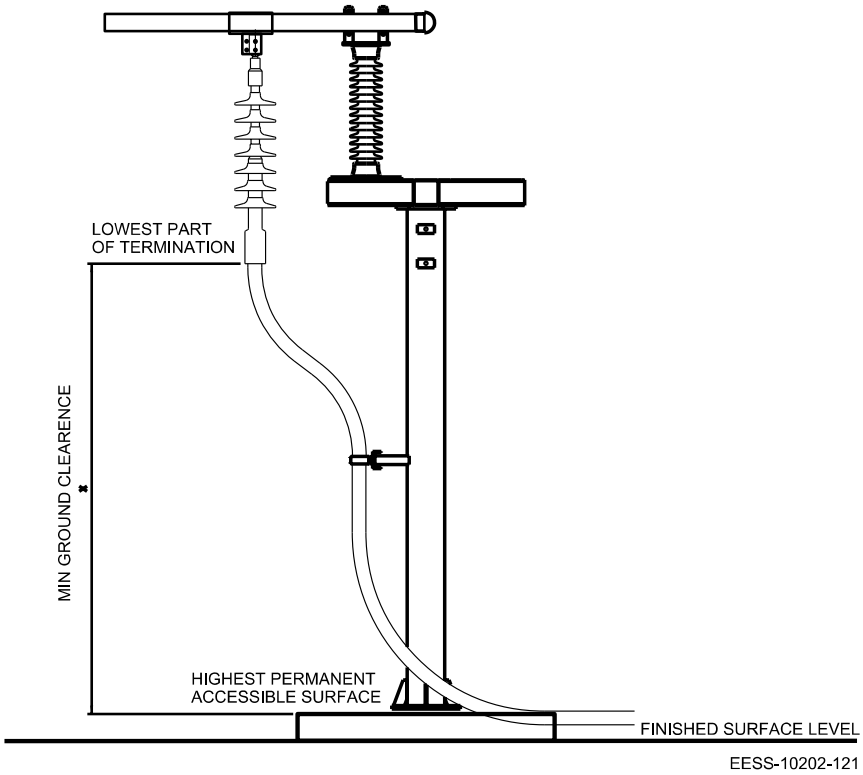

Figure 1: Ground Clearances to Terminations

6 Design and Safety Clearances

Table 2: Design and Safety Clearances

Parameter	Unit	Value						
Nominal voltage of the system (U_n)	**kV**	**11**	**22**	**33**	**66**	**110**	**132**	**220**
Highest voltage for installation (U_m) (AS 2067, 2016)	kV	12	24	36	72.5	123	145	245
Rated short duration PFWV (U_d) (AS 2067, 2016)	kV	28	50	70	140	230	275	460
Rated LIWV (U_p) (AS 2067, 2016)	kVp	95	150	200	325	550	650	1050
Minimum design clearances from Standards and statutory regulations								
Minimum Ph-E (d) (AS 2067, 2016)	mm	160	280	380	630	1100	1300	2100
Minimum Ph-Ph (D) (AS 2067, 2016)	mm	185	325	440	725	1265	1495	2415
Non-flashover distance N (AS 2067, 2016)	mm	175	310	420	695	1210	1430	2225
Regulated Exclusion Zones (Queensland Electrical Safety Regulation, 2013)	mm	700	700	700	1000	1000	1200	1800
Minimum safety clearances for operational purposes and maintenance work								
Adopted Exclusion Zones (EZ)	mm	700	700	700	1000	1210	1430	2225
Ground (G) = 2440 (AS 2067, 2016)	mm	2440	2440	2440	2440	2440	2440	2440
Section (S) = G + EZ	mm	3140	3140	3140	3440	3650	3870	4665
Horizontal (H) = 1900 + EZ	mm	2600	2600	2600	2900	3110	3330	4125
Vertical (V) = 1340 + EZ	mm	2040	2040	2040	2340	2550	2770	3565
Minimum horizontal boundary clearances to fences or walls								
Fences/wall with minimum height 2.5m (= S)	mm	3140	3140	3140	3440	3840	3940	4740
Minimum clearances to vehicle access within substation								
Horizontal from kerb line (X) = N + 1900 (AS 2067, 2016)	mm	2080	2210	2320	2600	3110	3330	4130
Vertical from road surface (Queensland Electrical Safety Regulation, 2013)	mm	6700	6700	6700	6700	6700	6700	7500

Table 3: Bay and Busbar Spacing

Parameter	Unit	Value						
Nominal voltage of the system	**kV**	**11**	**22**	**33**	**66**	**110**	**132**	**220**
Bay centreline spacing (Between bays or sections)	mm	4500	6000	6000	8000	10000	10000	16000
Spacing between busbar centreline phases								
Rigid bus centreline spacing	mm	700	1000	1200	1800	2600	2600	3600
Strung bus centreline spacing	mm	1200	1400	1600	2200	2750	2750	4500
Busbar centreline height above foundation level from bottom of steelwork								
Low rigid busbar	mm	3700	3700	3700	4000	4700	4700	5500
High rigid busbar	mm	4600	4600	4600	5200	6500	6500	9000

7 Design Considerations

7.1 Summary of Design Procedures for Applying Safety Clearances

As layout design is an intuitive process only the broad steps can be laid down in this summary. The steps to be followed are as follows:

1 From Table 2 select the appropriate clearances G, N, S, H and V to be used corresponding to the system voltage and the insulation level chosen in design of the system.

2 Decide methods of delivery of plant to be erected, erection methods and methods of maintenance. Consult with end users, e.g., construction and maintenance teams.

3 Determine what constraints are to be put on movement of mobile equipment by appropriate civil design.

4 Determine any special operating requirement and the priorities for keeping equipment in service. (Remember that conditions on the system may change in the future and a decision shall be made to cater for the likely future condition now or ensure that guarding can be added when the time comes.)

5 Decide if equipment is elevated or is to be placed on the ground with safety screens.

6 Determine the appropriate clearances that will be required to accommodate maintenance carried out by non-electrical workers as depicted in operational standards.

7 From a preliminary layout decide which are flexible and which are rigid conductors in the layout.

8 For flexible conductors determine the extreme positions which can be taken up from short circuit or wind. (Note a short circuit may occur during worst wind conditions.)

9 For equipment which is to be elevated by at least G, decide if unimpeded clearances in air can be used in the design or if safety screens will be necessary because of the proximity of live equipment.

10 Decide if width and height limiters should be used beside and above roadways.

11 Carry out a design review.

12 Finalise layout of electrical equipment

13 Recheck safety clearances and effect on the system of all maintenance activities.

14 Communicate to field staff any special assumptions made in the design and the reasons for them. (Note. Some assumptions may have to be shown on the drawings to discharge responsibilities in accordance with statutory requirements.)

15 Determine if public or neighbours have access to the security fencing of the substation.

16 Determine what fence or wall maintenance is to be catered for from inside the substation.

17 Select safety clearances in respect to fences and walls appropriate to the situation. (Note that clearances are to live equipment and exposed insulators.)

18 Repeat step 13 for the security fence

19 After construction carry out a review with stakeholders to ensure future improvement in the design process.

Note: Preliminary layout may be necessary at a number of stages in the design process.

7.2 Design Steps to be Considered for New Installations

The safety clearances are to be determined from Table 2 taking into account the voltage of the installation and lightning impulse withstand voltages being applied. The following steps are necessary.

7.2.1 Determine How Maintenance is to be Performed

In conjunction with end users the choices that need to be considered to allow maintenance to be carried out are as follows:

- From a ladder against the equipment
- From a platform beside the equipment
- From the top of the equipment

Figure 5.8 of (AS 2067, 2016) illustrates the application of working from a ladder or work platform. When working from a ladder the horizontal and vertical clearances shall be achieved. Refer to Annex A.

A folding stepladder is considered to be equivalent to an ordinary ladder. Even if it is not being leaned against equipment as an ordinary ladder, the foot position for working would require the ladder to be very close to the equipment, equivalent to being leant against it.

When working from a platform the section clearance shall be achieved.

When standing directly on top of equipment section clearance shall be achieved from the worker's foot position. Horizontal clearance from the any part equipment being worked on shall be achieved.

7.2.2 Extreme Position of a Conductor

In each of the above cases where clearances are being measured from live conductors, the extreme position of the conductor shall be considered. The position occupied by conductors is influenced by:

- Maximum sag of the conductors.
- Swing of the conductors including droppers expected during working conditions due to wind and short circuit.

Unless otherwise determined, the swing of the conductor shall be taken as 15° from the vertical plane, the angle measured from a line in the vertical plane containing the points of suspension at either end of the conductor. The extreme position a dropper could take up under wind and short circuit conditions would need to be determined in each case.

7.2.3 Movement of Vehicles and Maintenance Equipment

The amount and type of access for vehicles and maintenance plant provided in a substation depends on:

- The voltage level of the substation.
- The type of equipment installed
- The type of maintenance equipment used by Energy Queensland

The requirements of section 6.7 shall be achieved.

In carrying out the layout it is necessary for the designer, in conjunction with field staff, to determine how equipment is to be delivered and erected and how maintenance work is to be carried out.

For the purposes of this design standard, the edges of a roadway shall be defined adequately eg. by a kerb or by bollards. This ensures that in defined access ways the vehicle cannot approach too closely to live equipment under normal circumstances.

Typically the worst case load will be a transformer on a low loader. Where a transformer maybe required to be transported under energised bus bar, the bus bar above the road shall be designed to meet Table 2 and distance T Figure 5.2 of (AS 2067, 2016).

In the transformer area where a crane may be used, the extent of movement of the crane shall be considered. Where any part of the crane can rotate over the roadway kerb line towards live equipment, satisfactory horizontal and vertical clearances shall be maintained.

Annex A

Normative

Illustrations Adapted from AS 2067–1984 and AS 2067-2016 EESS-10202-10

A.1 Dimensions of Tall Operator - Figure G1, AS 2067–1984

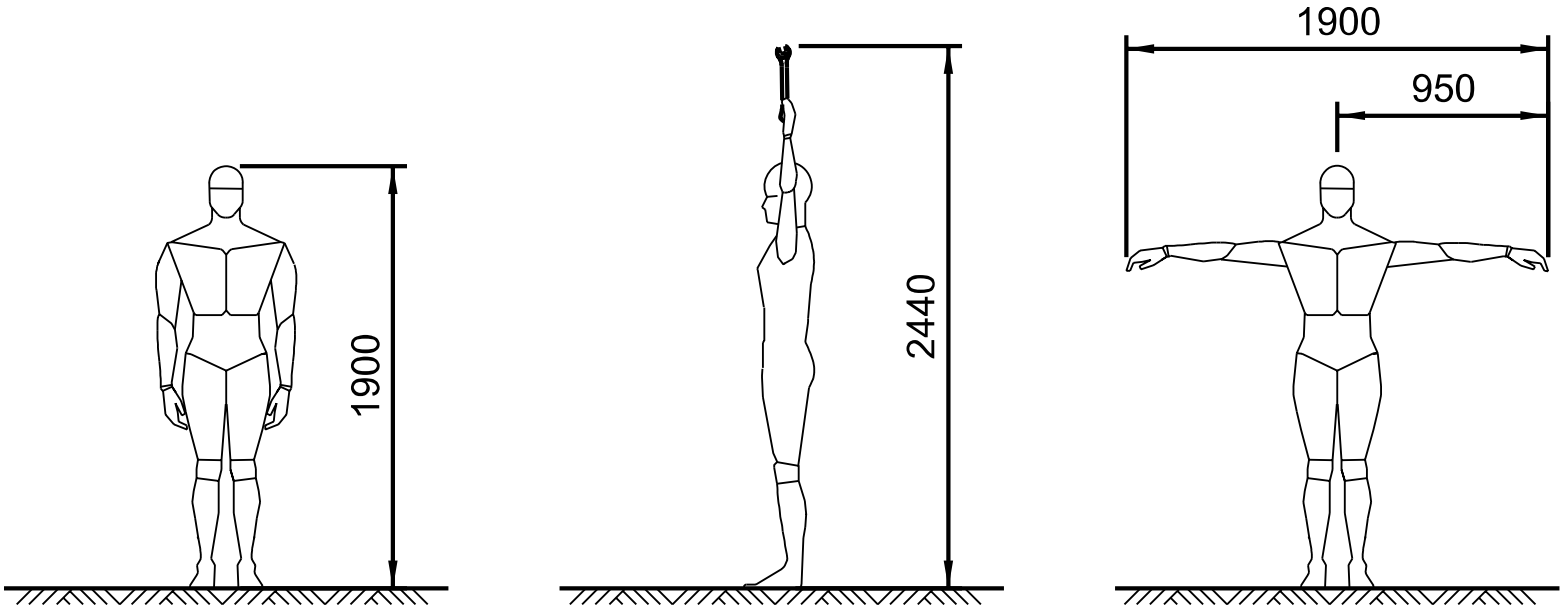

NOTE: Extreme dimensions include an allowance for small hand tools.

Fig. G1. DEMENSIONS OF TALL OPERATOR OR WORKMAN
EESS-10202-10

A.2 Work Sections in Single Busbar Installation - Figure G5, AS 2067–1984

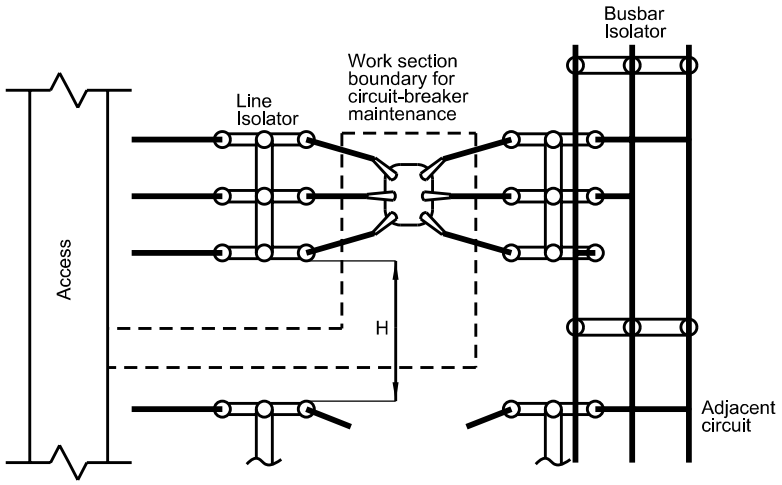

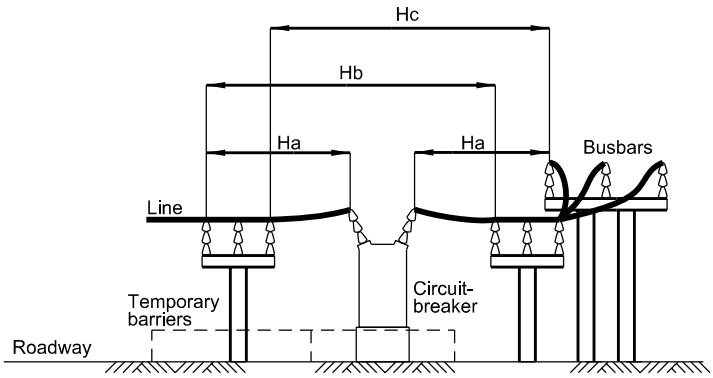

H= horizontal work safety clearance

Fig. G5. WORK SECTIONS IN SINGLE BUSBAR INSTALLATION

EESS-10202-12

The above figure shows a single bus feeder circuit where three work areas are accessed from a ladder.

For the circuit breaker, both the busbar and line isolators shall be open and safety clearance H_a provided.

For the bus isolator, safety clearance H_b will be required to the line isolator as the feeder line may be live from the remote end.

For the feeder line circuit which includes the isolator and line equipment requires the busbar isolator to be open and safety clearance H_c provided.

For the line isolator, safety clearance H shall be provided to any adjoining circuit.

A.3 Work Sections in Duplicate Busbar Installation - Figure G6, AS 2067–1984

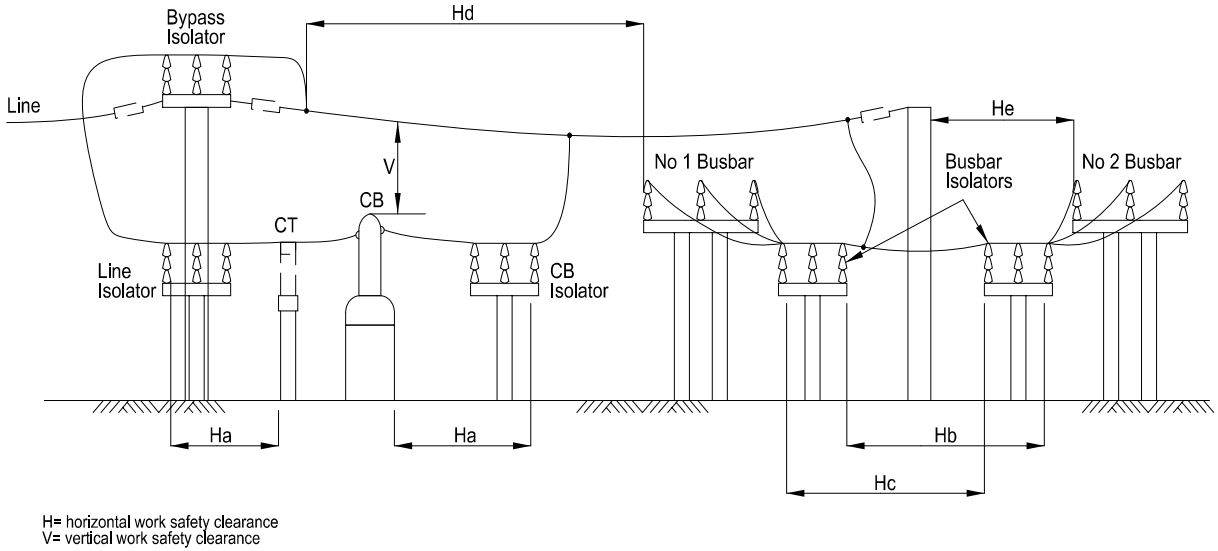

Fig. G6. WORK SECTIONS IN DUPLICATE - BUSBAR INSTALLATION

DRAWING ADAPTED FROM FIGURES G5 AND G6 OF AS2067-1984
EESS-10202-12

A typical duplicate-busbar installation with bypass facilities is shown above. This arrangement can be separated into five work sections as follows:

a) Circuit-breaker including current transformers.

b) Busbar isolator No 1 involving the shutdown of No 1 busbar.

c) Busbar isolator No 2 involving the shutdown of No 2 busbar.

d) Feeder line circuit including the line, line isolator, bypass isolator and the lineside equipment.

e) Circuit overhead connections and insulators involving the shutdown of No 1 busbar.

Following the principles laid down for the simplified arrangement shown in Fig.G5, the required work safety clearances for work from a ladder are indicated in Fig.G6 applicable to the different work sections (a) to (e).

A.4 Minimum Approach Distance for Transport in Transit - Figure 5.2, AS 2067–2016

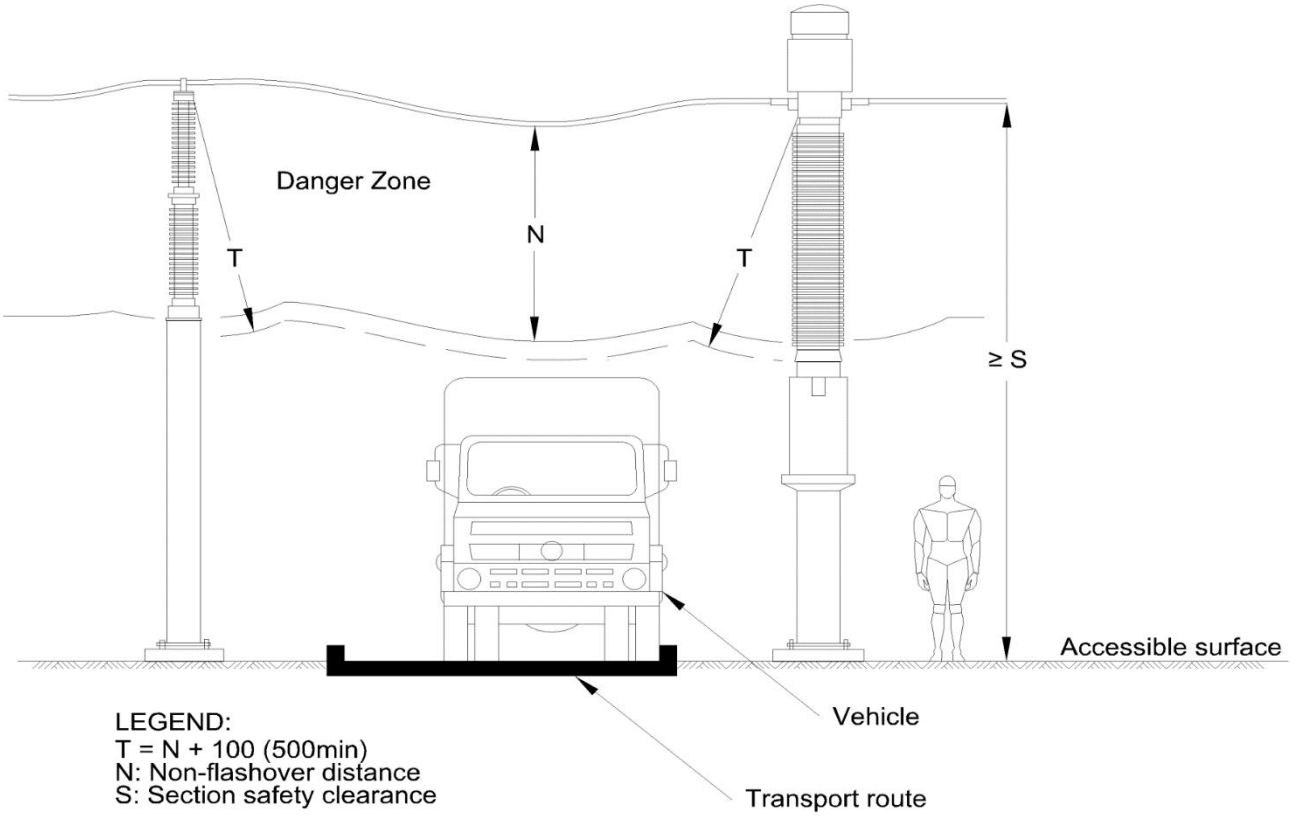

DIMENSIONS IN MILLIMETERS

FIGURE 5.2 MINIMUM APPROACH DISTANCE FOR TRANSPORT IN TRANSIT—TYPICAL OUTDOOR INSTALLATION WHERE PERSONNEL MUST REMAIN WITHIN THE CAB WHILST IN TRANSIT

DRAWING ADAPTED FROM FIGURE 5.2 OF AS2067-2016
EESS-10202-116

Where personnel are required to remain within the cab of the vehicle whilst it is in transit, clearance T = N + 100 shall apply between the vehicle (with open doors) and its load to live parts (refer Figure 5.2).

A.5 Minimum Approach Distance for Transport in Transit - Figure 5.3, AS 2067–2016

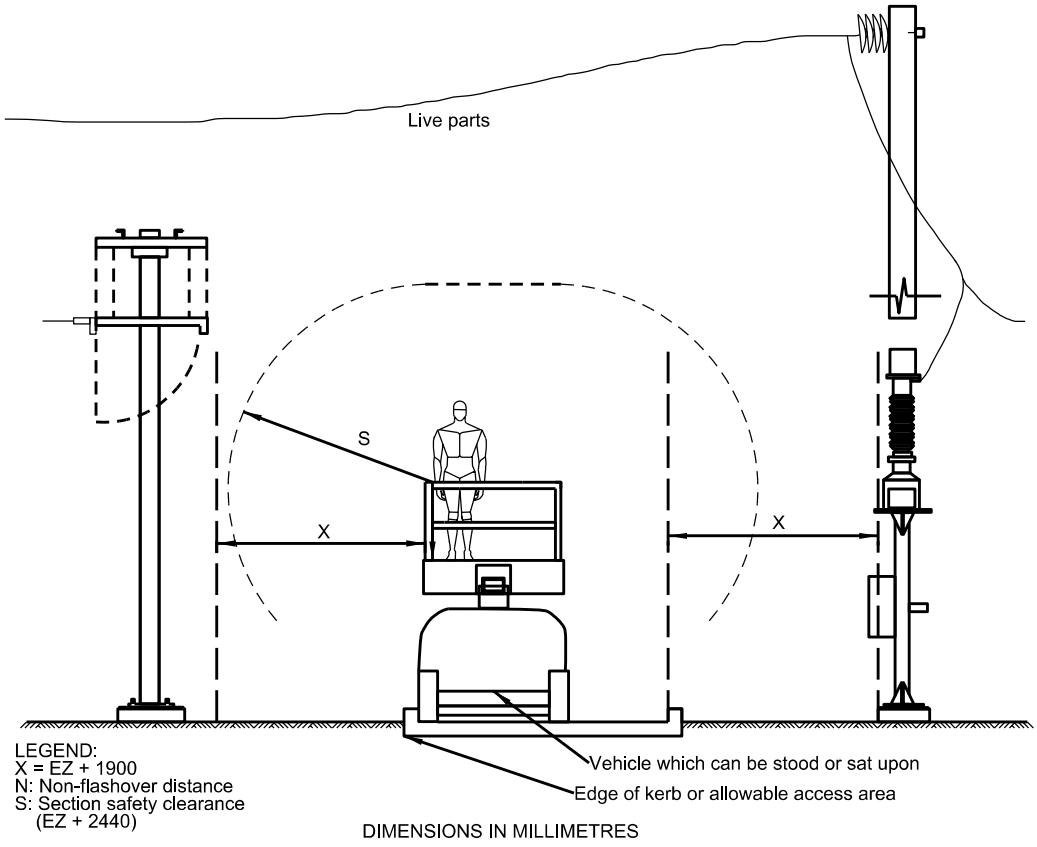

FIGURE 5.3 MINIMUM APPROACH DISTANCE FOR TRANSPORT IN TRANSIT-TYPICAL OUTDOOR INSTALLATION WHERE THE VEHICLES CAN BE STOOD OR SAT UPON WHILST IN TRANSIT

DRAWING ADAPTED FROM FIGURE 5.3 OF THE AS2067: 2016

EESS-10202-117

Where mobile equipment can be moved whilst being stood or sat upon, the greater of the following clearances shall be applied (refer Figure 1 5.3):

(i) Section safety clearance (S) applied from any part of the vehicle or mobile plant where a person would normally sit or stand to live parts.

(ii) Clearance X = N + 1900 applied horizontally from the extremities of the vehicle when against the kerb line or side of the access way to live parts and exposed conductors.

A.6 Protection Against Direct Contact by Protective Barriers/Screens – Figure 5.4, AS 2067-2016

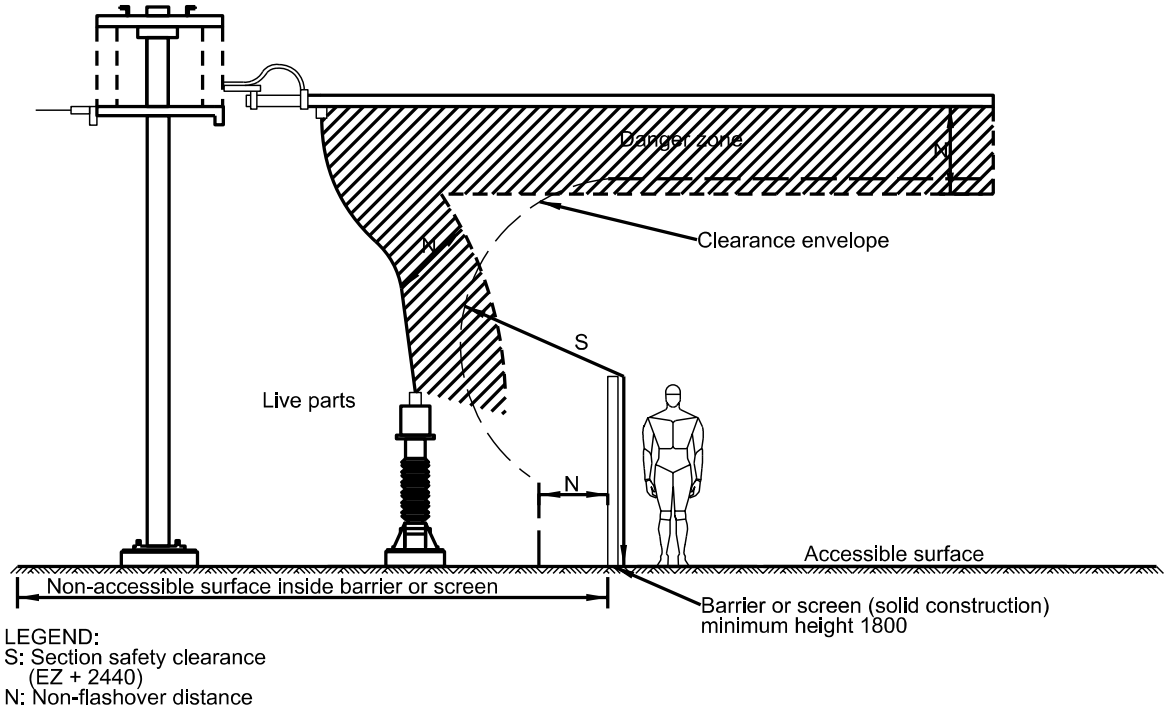

DIMENSIONS IN MILLIMETRES

FIGURE 5.4 PROTECTION AGAINST DIRECT CONTACT BY PROTECTIVE BARRIERS/ SCREENS WITHIN CLOSED ELECTRICAL OPERATING AREAS-WHERE THE PROTECTIVE BARRIERS ARE SOLID WALLS WITHOUT OPENINGS

DRAWING ADAPTED FROM FIGURE 5.4 OF THE AS2067: 2016
EESS-10202-117

For solid walls, without openings, with a minimum height of 1800 mm, the minimum protective barrier clearance shall be the greater of non-flashover distance (N) and the taut string section safety clearance (S) (see Figure 5.4).

A.7 Protection Against Direct Contact by Protective Barriers/Screens – Figure 5.5, AS 2067-2016

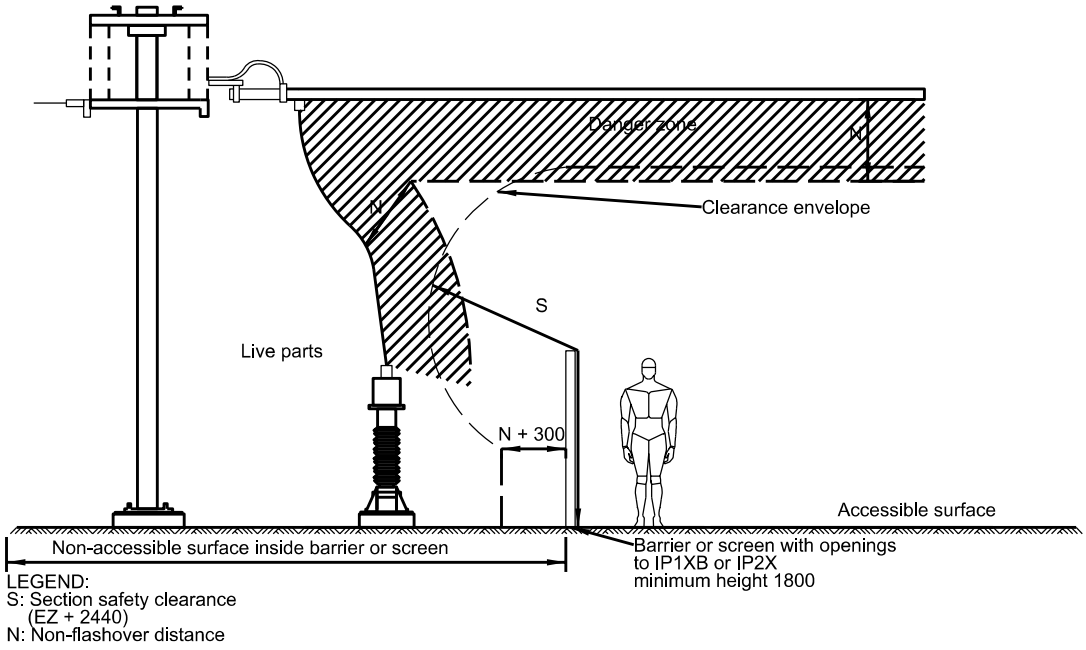

DIMENSIONS IN MILLIMETRES

FIGURE 5.5 PROTECTION AGAINST DIRECT CONTACT BY PROTECTIVE BARRIERS/SCREENS WITHIN CLOSED ELECTRICAL OPERATING AREAS-WHERE THE PROTECTIVE BARRIERS HAVE OPENINGS OR ARE OF MESH CONSTRUCTION

DRAWING ADAPTED FROM FIGURE 5.5 OF THE AS2067: 2016

EESS-10202-118

Barriers with openings shall have a degree of protection of at least IP1XB or IP2X [maximum mesh opening of 50 mm and 12.5 mm respectively and shall have a minimum height of 1800 mm. The barrier clearance shall be the greater of N + 300 mm and the taut string section safety clearance (S) (see Figure 5.5).

A.8 Protection Against Direct Contact by Protective Obstacles - Figure 5.6, AS 2067–2016

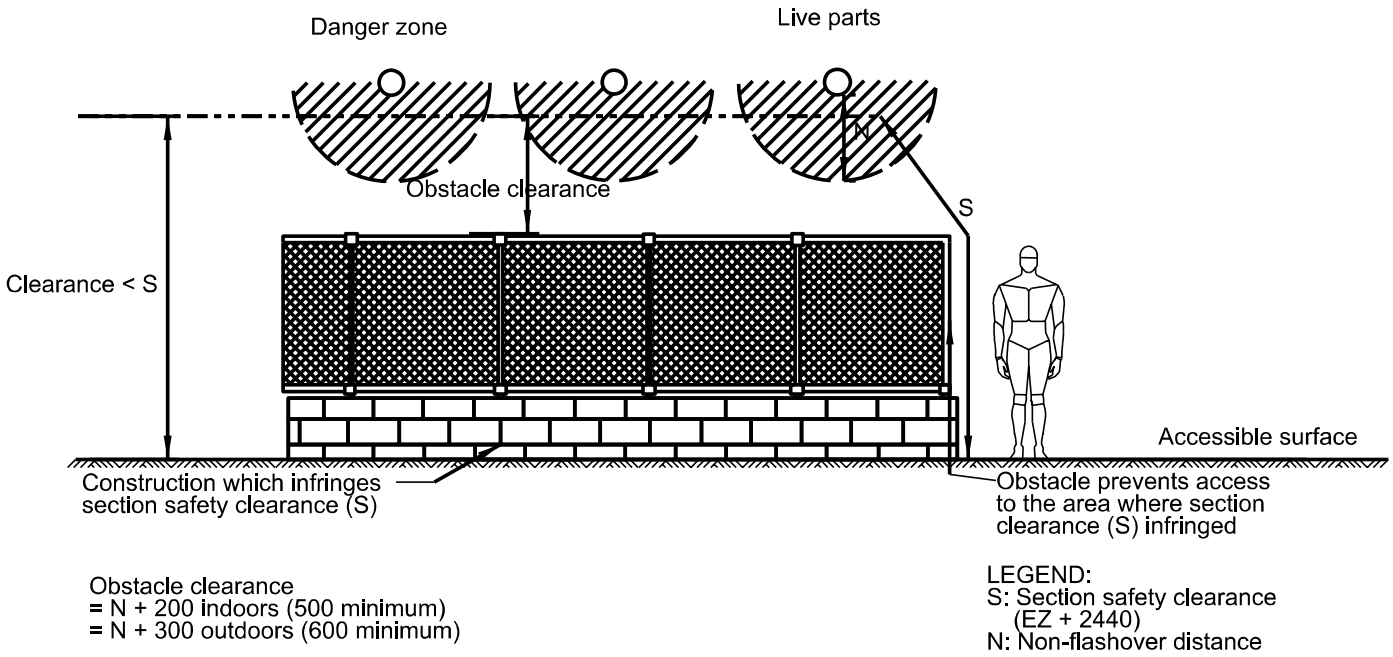

DIMENSIONS IN MILLIMETRES

FIGURE 5.6 PROTECTION AGAINST DIRECT CONTACT BY PROTECTIVE OBSTACLES WITHIN CLOSED ELECTRICAL OPERATION AREAS

DRAWING ADAPTED FROM FIGURE 5.6 OF THE AS2067: 2016

EESS-10202-118

Within installations a minimum clearance of N + 300 mm (minimum 600 mm) shall be maintained from live parts to the internal surface of any protective obstacle (see Figure 5.6).

A.9 Boundary Distances and Minimum Height at the External Fence/Wall – Figure 5.7, AS 2067-2016

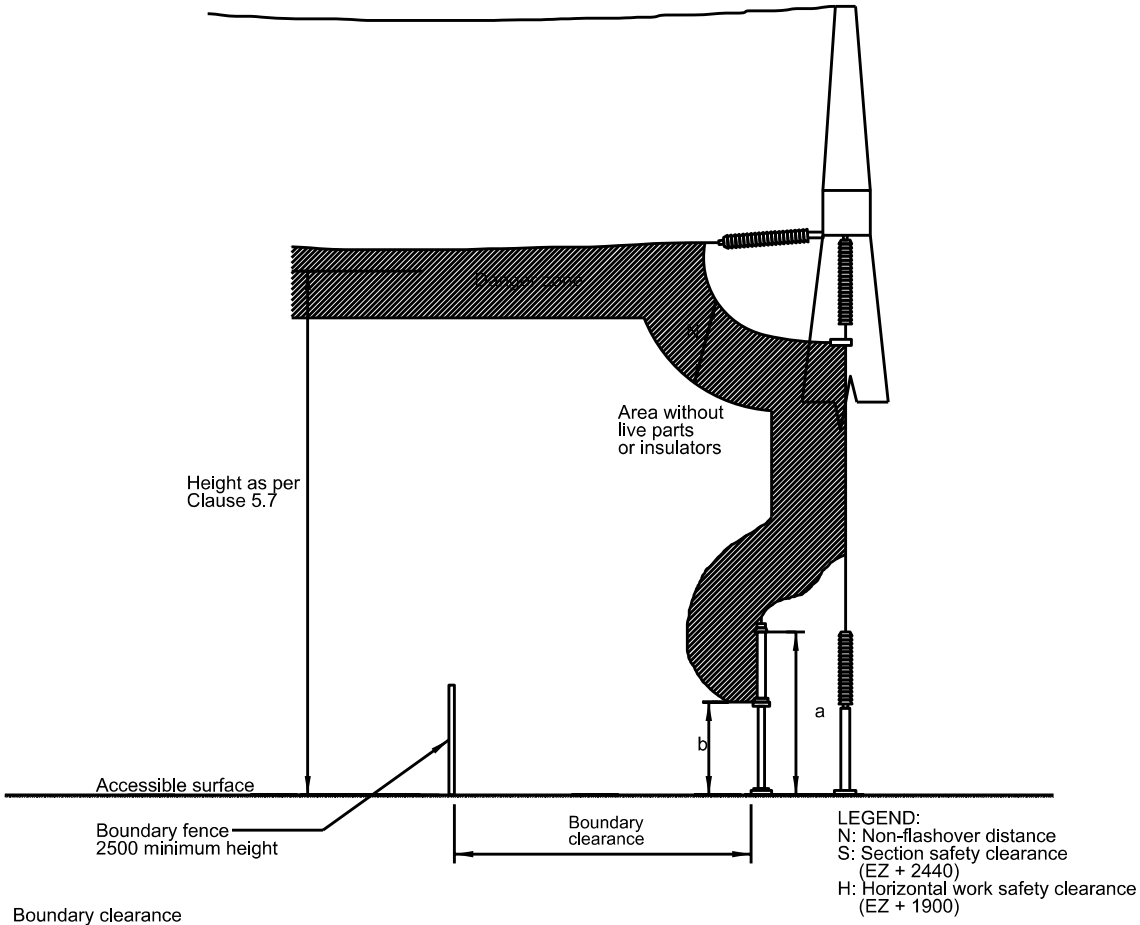

Boundary clearance
= EZ + 1000 when boundary fence is solid wall
= EZ + 2440 (S) when boundary fence is mesh construction
= EZ + 1900 (H) maintenance access by ladder to fence
= EZ + 2440 (S) maintenance access by platform to fence

a: If the distance to live parts is less than S, protection by barriers or obstacles shall be provided
b: If the distance is smaller than G (2440), protection by barriers or obstacles shall be provided

DIMENSIONS ARE IN MILLIMETRES

FIGURE 5.7 BOUNDARY DISTANCES AND MINIMUM HEIGHT AT THE EXTERNAL FENCE/WALL

DRAWING ADAPTED FROM FIGURE 5.7 OF THE AS 2067: 2016
EESS-10202-119

The external fence of outdoor installations of open design shall have the following minimum boundary clearances in accordance with Figure 5.7:

(a) Solid walls (height: see Clause 5.2.8) .....N + 1000 mm.

(b) Wire mesh/screens (height: see Clause 5.2.8).....S.

A.10 Minimum Heights and Minimum Working Clearances – Figure 5.8, AS 2067-2016

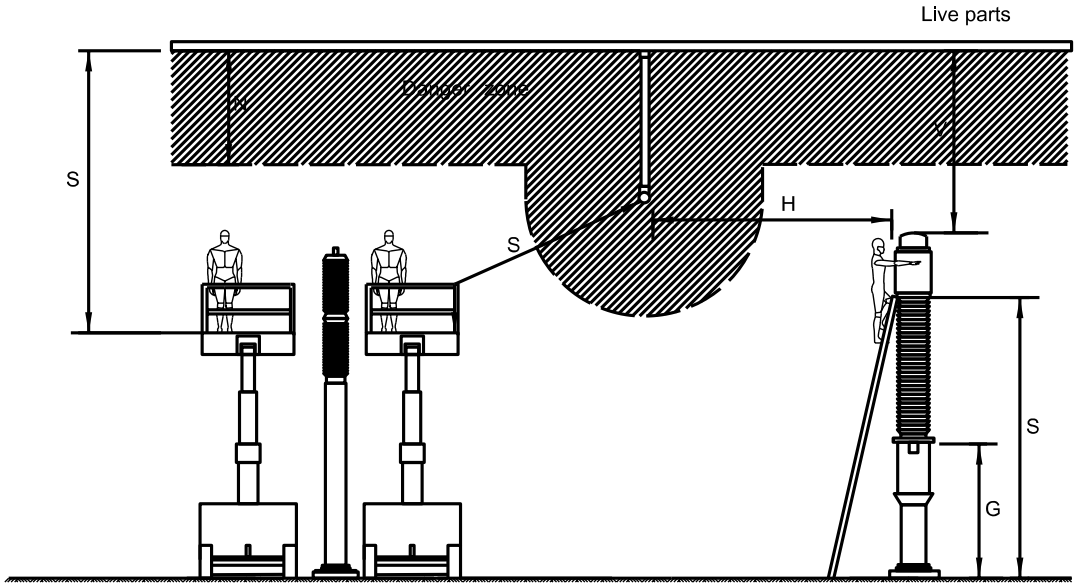

LEGEND:

N: Non-flashover distance
G: Ground safety clearance (2440)
S: Section safety clearance (EZ + G)
H: Horizontal work safety clearance (EZ + 1900)
V: Vertical work safety clearance (EZ + 1340)

DIMENSIONS IN MILLIMETRES

FIGURE 5.8 MINIMUM HEIGHTS AND MINIMUM WORKING CLEARANCES WITHIN CLOSED ELECTRICAL OPERATING AREAS (FOR ELECTRICALLY SKILLED OR INSTRUCTED PERSONS)

DRAWING ADAPTED FROM FIGURE 5.8 OF THE AS2067: 2016
EESS-10202-120

Section safety clearance (S) is applicable from the work platform, ground or access way on which personnel may stand or sit to perform the maintenance activity to the nearest live part. S is measured from the foot position, over guard rails and screens by taut string measurement to the nearest live part.

Horizontal work safety clearance (H) is applicable where work is to be carried out from a ladder. H is measured from the extremities of the work object horizontally to the nearest live parts.

Vertical work safety clearance (V) is applicable where work is to be carried out from a ladder. V is measured from the highest part of the work object vertically to the nearest live parts.

Annex B

Informative

Changes to Exclusion Zones

The (Queensland Electrical Safety Regulation, 2013) introduced the concept of exclusion zones. The purpose of this was to help manage electrical incidents involving Electrical workers and the public by prescribing 'approach' limits from energised parts.

In summary the main difference is that (AS 2067, 2016) applies safety clearances as measured from ground level to the live part where as the Electrical Safety Regulation applies exclusion zones around energised parts. (AS 2067, 2016) states the onus is on the design height of switchgear whereas the Electrical Safety Regulation requires personnel to take appropriate measures to remain outside the exclusion zone at all times.

For the purposes of application in a legal sense a Regulation is determined to be more binding than that of a Standard. Thus it could be argued in a court that the Electrical Safety Regulation has precedence over (AS 2067, 2016).

Not previously included in AS 2067 but included in Section 5.1.1 (AS 2067, 2016) is "NOTE: National, state and territory regulations may require the use of higher clearance values." This also supporting the decision.

Historically within the South East Region 1900mm plus the exclusion zone has been used instead of the ground clearance. This has resulted in lower clearances for 11kV and 33kV installations.

Input from the Electrical Safety Office was requested. The response was that in the first instance the exclusion zones from the (Queensland Electrical Safety Regulation, 2013) should be achieved.

Powerlink also use the exclusion zones from the (Queensland Electrical Safety Regulation, 2013) when calculating the safety clearances from ground level. Energy Queensland adopting this approach will ensure that all utilities within Queensland are using the same values.

Annex C

Informative

Frequently Asked Questions

C.1 Do I need to bring an existing site into line with this standard?

Existing equipment does not need to be brought into line with this standard. Any extensions to the site will need to be in line with the standard.

Example adding a new bay to an existing bus:

The new bay is required to meet this standard, where the bay connects to the existing bus, the connections shall be such that as soon as practical the clearances in this standard are achieved.

Where a bus extension is performed it shall meet the requirements of this standard.

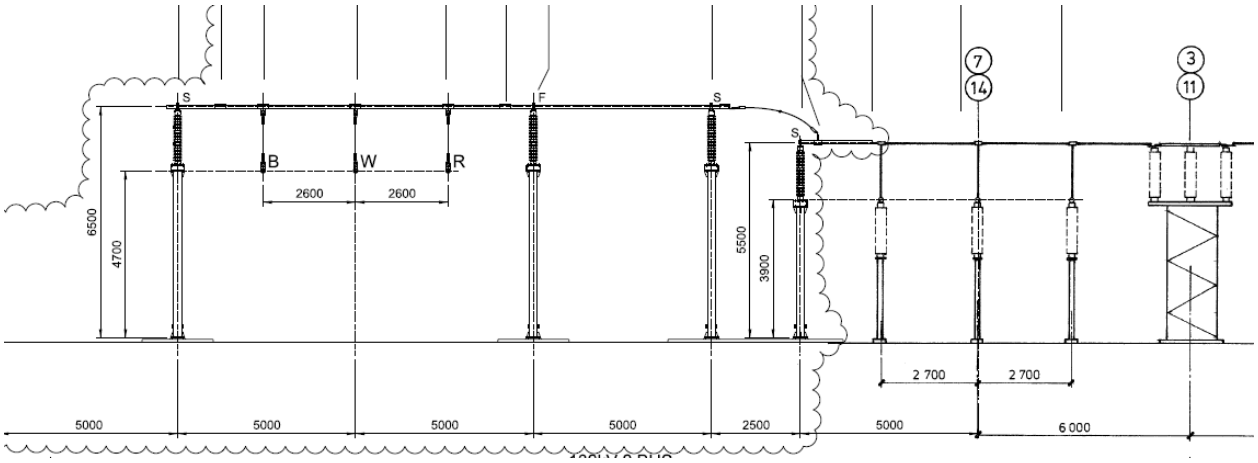

Figure 2: Bus Extension to an Existing Site

C.2 What do I do when replacing an item of plant in a bay where this standard is not achieved?

Where practical the replacement item of plant shall be such that the clearances with the bay are achieved. The new item of plant shall achieve section clearance. Existing horizontal and vertical work clearances shall be checked and before plant is replaced and shall be achieved or better. Where possible the horizontal and vertical clearances shall meet this standard.

Example of a CB replacement:

A circuit breaker required replacement as part of an aged asset program. During the design it was identified that the horizontal clearance to the bus isolator was not achieved. The new circuit breaker would utilise the existing foundation but required new hold down bolts to be installed into the foundation. There was sufficient room to move the circuit breaker closer to the current transformers meeting the horizontal clearance to the bus isolator and still achieve horizontal clearance to line isolator.

In this case there was no additional work required to move the circuit breaker to achieve the required clearances or any substantial increase in project cost.

C.3 The CB Pole spacing doesn't meet the standard, can I still use it?

Circuit breaker pole spacing is defined by the circuit breaker manufacturer design and insulation impulse dielectric type testing. See section 5.4 to learn more about type testing. Conductors to the circuit breaker shall be designed and installed such that busbar phase spacing is achieved as soon as practicable.

Annex D

Informative

Revision History

Revision date	Version number	Author	Description of change/revision
09/05/2001	1.0	Qui Dinh	Draft approved
27/02/2004	1.1	Qui Dinh	Exclusion zones changed to 110kV, 132kV and 220kV, consequently section clearances and related clearances changed
29/07/2004	1.2	Qui Dinh	Horizontal from kerb for 220kV modified from 1800 to 2300mm 400mm added to heights above foundation level of low and high rigid bus of 11, 22, 33 and 66kV
15/04/2005	1.3	Qui Dinh	Table 2 - 110kV and 132kV made the same
25/05/2007	1.4	Qui Dinh	Clauses 2 and 3 interchanged Clause 4.3 – 2nd paragraph minor change
05/06/2007	1.5	Qui Dinh	Header changed Clause 4.3 – typo corrected
30/11/2010	1.6	Qui Dinh	Header changed Footer added Clause 2 – some references removed Clause 3 – Definitions, some definitions changed, added, and deleted especially those from AS2067-1984 Clause 4 – Heading “Electrical” changed to “Minimum” Clause 4.3 – heading and 1st paragraph changed Clause 4.4 – modified Clause 4.5 – 1st paragraph modified Table 1 – EZ for 132kV & 220kV changed. Consequently corresponding values of section S Horizontal H & Vertical V modified Table 1 – terms changed to match definitions in AS 2067-2008 Appendix Figures 5.3, 4 & 5 of AS2067-2008 added
03/12/2013	1.7	Cassie Caldwell	Document copied to new template
21/02/2017	1.8	Luke McCarthy	Abstract changed Keywords added

Revision date	Version number	Author	Description of change/revision
			Style changed – Justified text, removed underlines, lowered case of titles Document approvals – Substituted Peter Brennan for Jason Hall, added Simon Hickey Stakeholders/Distribution list – SDOF added, template text removed Purpose and Scope – Split into two sections, updated both, listed scope factors using bullet points, excluded special condition installations, type tested equipment, unaltered sites and unauthorised access References – Added Standard for Climate and Natural Hazard Resilience - 3057510: (STNW3007), (AS 2067, 2016), (AS 2067, 2016), (Queensland Electrical Safety Regulation, 2013) Updated definitions to align with (AS 2067, 2016) – included 'protective obstacle' and 'authorised person' Updated rated insulation level definition to align with (AS 1824.1, 2019) Removed clause 5.1 Renumbered subsequent clauses Renamed heading "Minimum Clearances" to "General" Updated new clause 5.1 to clarify explanations, reference Table 2 and detail section clearance requirements Updated new clause 5.2 – included statement regarding clearance application, explanation of phase-phase and non-flashover distances, detailed extreme workman dimensions, clarified bund wall clearance and made reference to Annex Figures 5.8 and G1 Added clause 5.3 Exclusion Zones – outlined their origin and difference between Ergon Energy adoptions and Queensland Regulations Updated new clause 5.4 – Title and section mention protective obstacle application, detailed boundary requirements, outlined where and when to apply barriers/obstacles, referenced Figures 5.4, 5.5, 5.6 and 5.7

Revision date	Version number	Author	Description of change/revision
			Updated new clause 5.5 – Formatting and referencing, included load considerations, updated vertical clearances from roads section, added section pertaining to mobile plant, referenced Figure 5.3 Updated new clause 5.6 – Included section on mechanical stresses and referenced Figures G5 and G6 Updated Table 2 – Headings, 132kV vertical clearances from '2740mm' to '2840mm', put '=S' from Fences/wall with minimum height 2.5 m in brackets Added Standard and statutory requirements section to Table 1, including Queensland Regulation exclusion zones Added minimum clearances for operational purposes and maintenance work adopted by Ergon Energy section to Table 2 Separated the centreline height above foundation values from Table 3, split 110 kV and 132 kV columns for consistency Incorrect reference to AS 2067: 2008 was removed Removed Figures G2 and G3 from Annex Redrew all relevant figures. Updated Figures G1, G5 and G6 to redrawn versions in Annex Updated Figures 5.3, 5.4 and 5.5 to AS 2067: 2016 equivalents (redrawn versions) in Annex Added Figures 5.6, 5.7 and 5.8 from AS 2067: 2016 (redrawn versions) to Annex
31/12/2018	2	Shaun Ferguson Addison Gabriel	Amended with recommendations documented in the white paper EQL template Reduced 123kV and 145kV clearances Added design steps to be considered Section 3 added
12/9/2023	5	John Lansley	Minor formatting updates and bookmark error correction, prior to arranging approval workflow
12/1/2024	6	John Lansley	Added Sect 5.7 Clearance Over Boundary Fence
22/10/2026	7	Shaun Ferguson	3 yearly audit completed with no changes required