LIGHTING
CONSTRUCTION MANUAL

ASSEMBLIES

Back to MAIN INDEX

Go to SECTION INDEX

ASSY	DESCRIPTION	PAGE
800-1	Hook Service to Wood Pole	1-2-800
800-6	Eyebolt and Eyenut M16x150 to Street Pole	1-2-800
800-7	Eyebolt and Eyenut M16x200 to Street Pole	1-2-800
800-8	Eyebolt and Eyenut M16x250 to Street Pole	1-2-800
801-1	Cartridge Fuse Link 32A HRC	1-2-801
801-2	Cartridge Fuse Link 20A HRC	1-2-801
801-5	Cartridge Fuse Link 80A HRC	1-2-801
801-6	Fuse Holder 100A (Service) to Bracket	1-2-801
802-1	Clamp Strain to Service Hook	1-2-802
802-6	Bracket (Service Fuse) to Wood Pole	1-2-802
803-1	Saddle (20mm) to Wood Pole	1-2-803
803-3	Saddle zinc plated 25mm	1-2-803
803-6	Bracket Cable Support to X-Arm	1-2-803
804-1	Connector I.P.C. 25/95mm² Main to 6/35mm² Tap	1-2-804
804-2	Connector 6-35mm²Al / 4-35mm²Cu	1-2-804
804-6	Connector Tap-Off Bare Al Main 10-35mm² Dia to 6/35mm² ABC Tap	1-2-804
804-7	Connector Tap-Off Bare Cu Main 25-95mm² Dia to 6/35mm² ABC Tap	1-2-804
805-1	End Cap Push on 25mm² ABC	1-2-805
805-6	Conduit PVC Flexible - 16mm	1-2-805
805-8	Conduit PVC Flexible - 20mm	1-2-805
805-10	Terminator Conduit PVC Flexible - 16mm	1-2-805
805-12	Terminator Conduit PVC Flexible - 20mm	1-2-805
806-1	Major Rd Luminaire S100 Normal	1-2-806
806-2	Major Rd Luminaire S150 Normal	1-2-806
806-3	Major Rd Luminaire S250 Normal	1-2-806
806-4	Major Rd Luminaire S400 Normal	1-2-806
806-9	Major Rd Luminaire H100 Normal	1-2-806
806-10	Major Rd Luminaire H150 Normal	1-2-806
806-11	Major Rd Luminaire H250 Normal	1-2-806
806-12	Major Rd Luminaire H400 Normal	1-2-806
807-1	Major Rd Supply to Terminal Panel Conc. Pole	1-2-807
807-6	Major Rd Supply to Terminal Panel Steel Pole	1-2-807
808-1	Major Rd Outreach Arm 1.5m Single	1-2-808
808-2	Major Rd Outreach Arm 3.0m Single	1-2-808
808-3	Major Rd Outreach Arm 4.5m Single	1-2-808
808-4	Major Rd Outreach Arm 1.5m Double	1-2-808
808-5	Major Rd Outreach Arm 3.0m Double	1-2-808
808-6	Major Rd Outreach Arm 4.5m Double	1-2-808
809-6	Major Rd Pole 7.0m Base Plate Mounted Pole	1-2-809
809-7	Major Rd Pole 8.5m Base Plate Mounted Pole	1-2-809
809-8	Major Rd Pole 10.0m Base Plate Mounted Pole	1-2-809
809-9	Major Rd Pole 13.0m Base Plate Mounted Pole	1-2-809
810-2	Major Rd Foundation 350PCD BPM Steel Pole	1-2-810
811-1	Major Rd Terminal Panel & Cable to Single Outreach Arm	1-2-811
811-2	Major Rd Terminal Panel & Cable to Double Outreach Arm	1-2-811
812-1	Bend UG Service Conduit 40 dia x 90Deg 300R	1-2-812
812-5	Conduit H.D. 40 dia	1-2-812
812-10	Bend UG Service Conduit 40 dia x 90Deg 600R	1-2-812
812-15	Conduit Flexible 40 dia & adaptor	1-2-812
813-2	Major Rd Foundation 350 PCD Shallow (Special Purpose)	1-2-813
813-4	Major Rd Foundation 500 PCD Shallow (Special Purpose)	1-2-813
814-1	Minor Rd Pole 4.5m Nostalgia (Green)	1-2-814
814-2	Minor Rd Pole 4.5m Nostalgia (Black)	1-2-814
814-3	Minor Rd Pole 4.5m Nostalgia (Blue/Grey)	1-2-814
815-1	Minor Rd Outreach Arm 1.5m Single	1-2-815
815-2	Minor Rd Outreach Arm 1.5m Double	1-2-815
816-3	Minor Rd Luminaire S70 Nostalgia Type 1 (Green)	1-2-816
816-9	Minor Rd Luminaire S70 Nostalgia Type 1 (Black)	1-2-816
816-12	Minor Rd Luminaire S70 Nostalgia Type 1 (Blue/Grey)	1-2-816
816-14	Minor Rd Luminaire CF32 Nostalgia Type 1 (Green)	1-2-816
816-17	Minor Rd Luminaire CF32 Nostalgia Type 1 (Black)	1-2-816
816-20	Minor Rd Luminaire CF32 Nostalgia Type 1 (Blue/Grey)	1-2-816
816-21	Minor Rd Luminaire L21 Nostalgia Type 1 (Green)	1-2-816
816-22	Minor Rd Luminaire L26 Nostalgia Type 1 (Green)	1-2-816
816-23	Minor Rd Luminaire L34 Nostalgia Type 1 (Green)	1-2-816
816-24	Minor Rd Luminaire L21 Nostalgia Type 1 (Black)	1-2-816
816-25	Minor Rd Luminaire L26 Nostalgia Type 1 (Black)	1-2-816

A	ORIGINAL ISSUE	
B	07.12.12	
C	08.01.14	
D	22.03.16	
E	03.04.18	

REFERENCE DRAWING ENERGEX

REFERENCE DRAWING ERGON

This document must not be reproduced in part or whole without written permission from ENERGEX or Ergon Energy

energex

© COPYRIGHT 2002 ENERGEX
ENERGEX Corporation Limited
ABN 40 078 849 055

ERGON ENERGY

© COPYRIGHT 2002 ERGON ENERGY
Ergon Energy Corporation Limited
ABN 50 087 646 062

HARD COPY UNCONTROLLED

		Date
Approved Ergon	C. Noel	01/05/18
Approved Energex	F. Zaini	01/05/18
Checked	P. Relf / A. Bletchly	01/05/18
Drawn	L. Burton / T. Borg	01/11/10

LIGHTING

ASSEMBLIES INDEX

EE DRWG NO: 1-2-1-1

EGX DRWG NO: 10500-A4-1-2-1-1

VOLUME	FOLDER	PAGE	ISSUE
1	2	1-1	0E

ASSY	DESCRIPTION	PAGE
816-26	Minor Rd Luminaire L17 Nostalgia Type 1 (Navy)	1-2-816
816-27	Minor Rd Luminaire L25 Nostalgia Type 1 (Navy)	1-2-816
816-28	Minor Rd Luminaire L30 Nostalgia Type 1 (Black)	1-2-816
816-29	Minor Rd Luminaire L30 Nostalgia Type 1 (Blue/Grey)	1-2-816
817-3	Minor Rd Luminaire S70 Normal	1-2-817
817-7	Minor Rd Luminaire S70 Aeroscreen	1-2-817
817-9	Minor Rd Luminaire CF32 Normal	1-2-817
817-12	Minor Rd Luminaire H70 Normal	1-2-817
817-13	Minor Rd Luminaire CF32 Aeroscreen	1-2-817
817-15	Minor Rd Luminaire H70 Aeroscreen	1-2-817
817-22	Minor Rd Luminaire L17 Normal	1-2-817
817-23	Minor Rd Luminaire L17 3K Normal	1-2-817
817-33	Minor Rd Luminaire L17 Aeroscreen	1-2-817
817-34	Minor Rd Luminaire L17 3K Aeroscreen	1-2-817
817-36	Minor Rd Luminaire L24 Aeroscreen	1-2-817
817-37	Minor Rd Luminaire L33 Aeroscreen	1-2-817
817-38	Minor Rd Luminaire L33 3K Aeroscreen	1-2-817
818-1	Minor Rd Terminal Panel & Cable to Nostalgia Types 1 & 2	1-2-818
818-2	Minor Rd Terminal Panel & Cable to Single Outreach Arm	1-2-818
818-3	Minor Rd Terminal Panel & Cable to Double Outreach Arm	1-2-818
821-1	Minor Rd Bracket MI1 & Cable Mounting to Wood Pole	1-2-821
821-2	Minor Rd Bracket MI2 & Cable Mounting to Wood Pole	1-2-821
822-1	Major Rd Bracket MA1 & Cable Mounting to Wood Pole	1-2-822
822-2	Major Rd Bracket MA2 & Cable Mounting to Wood Pole	1-2-822
823-1	Major Rd Bracket MA3 & Cable Mounting to Wood Pole	1-2-823
823-2	Major Rd Bracket MA4 & Cable Mounting to Wood Pole	1-2-823
824-1	Major Rd Spigot Bracket & Cable Mounting to Wood Pole	1-2-824
825-1	Major Rd Spider 3 Way Head Frame Suit 1.5m Outreach	1-2-825
825-2	Major Rd Spider 3 Way Head Frame Suit 3.0m Outreach	1-2-825
825-3	Major Rd Spider 4 Way Head Frame Suit 1.5m Outreach	1-2-825
825-4	Major Rd Spider 4 Way Head Frame Suit 3.0m Outreach	1-2-825
826-1	Major Road Spider Outreach Arm 1.5m	1-2-826
826-2	Major Rd Spider Outreach Arm 3.0m	1-2-826
827-1	Terminal Panel & Cable to Major Rd Spider 3 Way O/R Arm	1-2-827
827-2	Terminal Panel & Cable to Major Rd Spider 4 Way O/R Arm	1-2-827
828-1	Major Rd Pole 7.0m Slip Base Mounted Steel	1-2-828
828-2	Major Rd Pole 8.5m Slip Base Mounted Steel	1-2-828
828-3	Major Rd Pole 10.0m Slip Base Mounted Steel	1-2-828
828-4	Major Rd Pole 13.0m Slip Base Mounted Steel	1-2-828
829-1	Major Road SBM 350 PCD Hold Down Bolt Cage	1-2-829
829-4	Major Road SBM 500 PCD Hold Down Bolt Cage	1-2-829
830-1	Sign, 5 Digit Asset ID Number Glued to Estate Pole	1-2-830
830-5	Sign, 7 Digit Asset ID Number Glued to Steel or Conc Pole	1-2-830
831-1	Connection SBM Pole to Pit Single Phase inc Pit, Lid, JB Kit	1-2-831
831-2	Connection SBM Pole to Pit Single Phase inc JB Kit Only	1-2-831
832-1	Major Rd Terminal Panel & Cable to 1 Outreach SBM Pole	1-2-832
832-2	Major Rd Terminal Panel & Cable to 2 Outreach SBM Pole	1-2-832
832-3	Major Rd Terminal Panel & Cable to 3 Outreach SBM Pole	1-2-832
832-4	Major Rd Terminal Panel & Cable to 4 Outreach SBM Pole	1-2-832
833-1	Pit and Lid Type 4	1-2-833
833-2	Pit and Lid Type 2	1-2-833
833-5	Junction Box / Enclosure & Cable Insect Protected	1-2-833
834-1	Non EGX/EE “Metered”ID Sign Screwed to Wood Pole	1-2-834
834-2	Non EGX/EE “Metered”ID Sign Glued to Conc. Pole	1-2-834
834-3	Non EGX/EE “Metered”ID Sign Self Adh. to Metal Pole	1-2-834
834-4	Non EGX/EE “Metered”ID Sign Strapped to Conc. Pole	1-2-834
835-1	Non EGX/EE Rate”3”ID Sign Screwed to Wood Pole	1-2-835
835-2	Non EGX/EE Rate”3”ID Sign Glued to Conc. Pole	1-2-835
835-3	Non EGX/EE Rate”3”ID Sign Self Adh. to Metal Pole	1-2-835
835-4	Non EGX/EE “W”ID Sign Self Adh. to Metal Pole	1-2-835
836-1	Bracket to Insulate MI1, MI2, MA1, & MA2 to Conc Pole	1-2-836
837-1	Bracket to Insulate MA3 to Conc Pole	1-2-837
837-5	Bracket to Insulate MA4 to Conc Pole	1-2-837
838-1	Terminiation16mm² & 4mm² N/S Cable	1-2-838
838-5	Water Block Connector 1.5 - 25mm²	1-2-838
839-2	Major Rd Foundation 500 PCD BPM Steel Pole	1-2-839
840-1	Minor Road Cast in Situ Foundation Depth 1.2m	1-2-840
840-2	Minor Road Cast in Situ Foundation Depth 1.5m	1-2-840

A	ORIGINAL ISSUE	
E	02.03.17	
F	03.04.18	
G	27.02.19	
H	05.08.19	

REFERENCE DRAWING ENERGEX

REFERENCE DRAWING ERGON

This document must not be reproduced in part or whole without written permission from ENERGEX or Ergon Energy

energex

© COPYRIGHT 2019 ENERGEX
ENERGEX Corporation Limited
ABN 40 078 849 055

ERGON ENERGY

© COPYRIGHT 2019 ERGON ENERGY
Ergon Energy Corporation Limited
ABN 50 087 646 062

HARD COPY UNCONTROLLED

		Date
Approved Ergon	A. Bletchly	09/08/19
Approved Energex	A. Bletchly	09/08/19
Checked	K. Slater	09/08/19
Drawn	L. Burton / T. Borg	01/11/10

LIGHTING

ASSEMBLIES INDEX

EE DRWG NO: 1-2-1-2

EGX DRWG NO: 10500-A4-1-2-1-2

VOLUME	FOLDER	PAGE	ISSUE
1	2	1-2	0H

ASSY	DESCRIPTION	PAGE
841-1	Major Rd Luminaire S100A Aeroscreen	1-2-841
841-2	Major Rd Luminaire S150A Aeroscreen	1-2-841
841-3	Major Rd Luminaire S250A Aeroscreen	1-2-841
841-4	Major Rd Luminaire S400A Aeroscreen	1-2-841
841-6	Major Rd Luminaire H100A Aeroscreen	1-2-841
841-7	Major Rd Luminaire H150A Aeroscreen	1-2-841
841-8	Major Rd Luminaire H250A Aeroscreen	1-2-841
841-9	Major Rd Luminaire H400A Aeroscreen	1-2-841
842-2	Major Rd Precast Foundation 350 PCD BPM Steel Pole	1-2-842
843-3	Minor Rd Luminaire S70 Nostalgia Type 2 (Green)	1-2-843
843-6	Minor Rd Luminaire S70 Nostalgia Type 2 (Black)	1-2-843
843-9	Minor Rd Luminaire S70 Nostalgia Type 2 (Blue/Grey)	1-2-843
843-11	Minor Rd Luminaire CF32 Nostalgia Type 2 (Green)	1-2-843
843-14	Minor Rd Luminaire CF32 Nostalgia Type 2 (Black)	1-2-843
843-17	Minor Rd Luminaire CF32 Nostalgia Type 2 (Blue/Grey)	1-2-843
843-18	Minor Rd Luminaire L21 Nostalgia Type 2 (Blue/Grey)	1-2-843
843-19	Minor Rd Luminaire L26 Nostalgia Type 2 (Blue/Grey)	1-2-843
843-20	Minor Rd Luminaire L34 Nostalgia Type 2 (Blue/Grey)	1-2-843
843-21	Minor Rd Luminaire L17 Nostalgia Type 2 (Green)	1-2-843
843-22	Minor Rd Luminaire L17 Nostalgia Type 2 (Black)	1-2-843
843-23	Minor Rd Luminaire L25 Nostalgia Type 2 (Green)	1-2-843
843-24	Minor Rd Luminaire L25 Nostalgia Type 2 (Black)	1-2-843
843-25	Minor Rd Luminaire L30 Nostalgia Type 2 (Green)	1-2-843
843-26	Minor Rd Luminaire L30 Nostalgia Type 2 (Black)	1-2-843
844-2	Minor Rd Nostalgia Bracket Double Arm Outreach (Green)	1-2-844
844-4	Minor Rd Nostalgia Bracket Double Arm Outreach (Black)	1-2-844
844-6	Minor Rd Nostalgia Bracket Double Arm Outreach (Blue/Grey)	1-2-844
845-1	Minor Rd Bracket MI3 & Cable, Mounting to Wood Pole	1-2-845
845-2	Minor Rd Bracket MI3 & Cable, Mounting to Conc Pole	1-2-845
846-1	Major Rd Pedestrian Floodlight Outreach Extension	1-2-846
847-1	PT Bracket & Cable Mounting to Wood Crossarm Minor Rd	1-2-847
847-3	PT Bracket & Cable Mounting to Wood Crossarm Major Rd	1-2-847
851-1	Major Rd High Mast Outreach Headframe 1 Way	1-2-851
851-2	Major Rd High Mast Outreach Headframe 2 Way	1-2-851
852-1	Major Rd High Mast Outreach Headframe 3 Way	1-2-852
852-2	Major Rd High Mast Outreach Headframe 4 Way	1-2-852
853-1	Major Rd High Mast Luminaire S150	1-2-853
853-2	Major Rd High Mast Luminaire S250	1-2-853
853-3	Major Rd High Mast Luminaire S400	1-2-853
853-4	Major Rd High Mast LED Luminaire 100W	1-2-853
853-5	Major Rd High Mast LED Luminaire 175W	1-2-853
853-6	Major Rd High Mast LED Luminaire 300W	1-2-853
854-1	Major Rd Mid Hinged BPM Steel Pole 10.0m	1-2-854
854-3	Major Rd Mid Hinged BPM Steel Pole 13.0m	1-2-854
854-10	9.0m Mounting Height BPM Hinged Pole c/w 1.5m Outreach	1-2-854
854-11	9.0m Mounting Height BPM Hinged Pole for Mounting on 1.2m Barrier c/w 1.5m Outreach	1-2-854
854-20	10.5m Mounting Height BPM Hinged Pole c/w 1.5m Outreach	1-2-854
854-21	10.5m Mounting Height BPM Hinged Pole for Mounting on 1.2m Barrier c/w 1.5m Outreach	1-2-854
855-1	Minor Rd Foundation Precast Depth 1.2m	1-2-855
855-2	Minor Rd Foundation Precast Depth 1.5m	1-2-855
856-1	Joint Use Streetlight Supply Box	1-2-856
857-1	Minor Road RCBO Terminal Panel & Cable to nostalgia type 1 & 2	1-2-857
857-2	Minor Road RCBO Terminal Panel & Cable to single outreach arm	1-2-857
857-3	Minor Road RCBO Terminal Panel & Cable to double outreach arm	1-2-857
858-1	Minor Rd Mid Hinged RH Galv Pole	1-2-858
858-2	Minor Rd Mid Hinged RH Green Pole	1-2-858
858-3	Minor Rd Mid Hinged RH Black Pole	1-2-858
858-4	Minor Rd Mid Hinged RH Blue Grey Pole	1-2-858
859-1	Minor Rd Bracket MI1 & Cable, Mounting to Conc Pole	1-2-859
859-2	Minor Rd Bracket MI2 & Cable, Mounting to Conc Pole	1-2-859
860-1	Major Rd Bracket MA1 & Cable, Mounting to Conc Pole	1-2-860
860-2	Major Rd Bracket MA2 & Cable, Mounting to Conc Pole	1-2-860
862-1	Major Rd Bracket MA3 & Cable, Mounting to Conc Pole	1-2-862
862-2	Major Rd Bracket MA4 & Cable, Mounting to Conc Pole	1-2-862
865-5	Watchman Floodlight Anti-Vandal Guard	1-2-865
866-1	Fuseholder to steel / concrete pole	1-2-866
867-1	Connection SBM Pole to Pit, 3 Phase, inc Pit, Lid & JB Kit	1-2-867
867-2	Connection SBM Pole to Pit, 3 Phase, inc JB Kit Only	1-2-867

A	ORIGINAL ISSUE	
E	02.03.17	
F	03.04.18	
G	27.02.19	
H	05.08.19	

REFERENCE DRAWING ENERGEX

REFERENCE DRAWING ERGON

This document must not be reproduced in part or whole without written permission from ENERGEX or Ergon Energy

energex

© COPYRIGHT 2019 ENERGEX
ENERGEX Corporation Limited
ABN 40 078 849 055

ERGON ENERGY

© COPYRIGHT 2019 ERGON ENERGY
Ergon Energy Corporation Limited
ABN 50 087 646 062

HARD COPY UNCONTROLLED

Approved Ergon	A. Bletchly	09/08/19
Approved Energex	A. Bletchly	09/08/19
Checked	K. Slater	09/08/19
Drawn	L. Burton / T. Borg	01/11/10

LIGHTING

ASSEMBLIES INDEX

EE DRWG NO: 1-2-1-3

EGX DRWG NO: 10500-A4-1-2-1-3

VOLUME	FOLDER	PAGE	ISSUE
1	2	1-3	0H

ASSY	DESCRIPTION	PAGE
868-1	Pedestrian Floodlight L100	1-2-868
868-2	Pedestrian Floodlight L300	1-2-868
868-3	Pedestrian Floodlight S250	1-2-868
868-4	Pedestrian Floodlight S400	1-2-868
868-5	Pedestrian Floodlight H250	1-2-868
868-6	Pedestrian Floodlight H400	1-2-868
868-7	Pedestrian Floodlight L200	1-2-868
869-1	Major Rd Floodlight Adapter - HID	1-2-869
869-2	Major Rd Floodlight Adapter - Pierlite LED	1-2-869
869-3	Major Rd Floodlight Adapter - Philips Tango (small)	1-2-869
869-4	Major Rd Floodlight Adapter - Philips Tango (med.)	1-2-869
870-1	Special Bulkhead Luminaire S70	1-2-870
870-2	Special Bulkhead Luminaire CF32	1-2-870
872-4	Minor Rd Pole 5.5m BPM Steel	1-2-872
872-9	Minor Rd Pole 6.5m BPM Steel Single Piece	1-2-872
873-0	Asset Identification Number ‘0’	1-2-873
873-1	Asset Identification Number ‘1’	1-2-873
873-2	Asset Identification Number ‘2’	1-2-873
873-3	Asset Identification Number ‘3’	1-2-873
873-4	Asset Identification Number ‘4’	1-2-873
873-5	Asset Identification Number ‘5’	1-2-873
873-6	Asset Identification Number ‘6’	1-2-873
873-7	Asset Identification Number ‘7’	1-2-873
873-8	Asset Identification Number ‘8’	1-2-873
873-9	Asset Identification Number ‘9’	1-2-873
873-A	Asset Identification Number ‘A’	1-2-873
873-B	Asset Identification Number ‘B’	1-2-873
873-C	Asset Identification Number ‘C’	1-2-873
873-D	Asset Identification Number ‘D’	1-2-873
873-E	Asset Identification Number ‘E’	1-2-873
874-2	Asset Identification Backing Plate to Wood Pole	1-2-874
874-4	Asset Identification Backing Plate to Powder Coated Pole	1-2-874
874-6	Asset Identification Backing Plate to Concrete / Steel Pole	1-2-874
875-1	SL32A Label for Service Fuse	1-2-875
876-1	Unmetered Supply From Public Light Pole	1-2-876

ASSY	DESCRIPTION	PAGE
880-1	Wood Pole Numbering	1-2-880
880-2	Concrete Pole Numbering	1-2-880
880-3	Steel Pole Numbering	1-2-880
883-1	Watchman Floodlight Circuit Breaker	1-2-883
884-1	Consumer’s Property Pole Label	1-2-884
890-3	Luminaire S70 Nostalgia Type 2 (Green) No Bracket	1-2-890
890-6	Luminaire S70 Nostalgia Type 2 (Black) No Bracket	1-2-890
890-9	Luminaire S70 Nostalgia Type 2 (Blue/Grey) No Bracket	1-2-890
891-1	Major Rd Pedestrian Outreach Arm PF-1	1-2-891
892-1	Major Rd Pedestrian Outreach Arm PF-2	1-2-892
893-1	Major Rd Pedestrian Outreach Arm PF-3	1-2-893
894-1	Major Rd Outreach Special Single	1-2-894
895-1	Major Rd Outreach Special Dual	1-2-895
896-1	Minor Rd Outreach Special Single	1-2-896
897-1	Cable Cover to Crossarm	1-2-897
898-1	Major & Minor Road Underbridge Bracket	1-2-898
899-1	Special Bulkhead Luminaire S150	1-2-899
900-1	Minor Rd Luminaire LF 2 x 14 T5	1-2-900
900-2	Minor Rd Luminaire LF 2 x 24 T5	1-2-900
901-1	PE Cell - D-2, low rating	1-2-901
901-2	PE Cell - NEMA, high rating	1-2-901
902-1	Lamp - High Pressure Sodium - S70	1-2-902
902-2	Lamp - High Pressure Sodium - S100	1-2-902
902-3	Lamp - High Pressure Sodium - S150	1-2-902
902-4	Lamp - High Pressure Sodium - S250	1-2-902
902-5	Lamp - High Pressure Sodium - S400	1-2-902
902-6	Lamp - Mercury Vapour - M50	1-2-902
902-7	Lamp - Mercury Vapour - M80	1-2-902
902-22	Lamp - Mercury Vapour - M125	1-2-902
902-23	Lamp - Mercury Vapour - M250	1-2-902
902-24	Lamp - Mercury Vapour - M400	1-2-902

A	ORIGINAL ISSUE	
E	02.03.17	
F	03.04.18	
G	27.02.19	
H	05.08.19	

REFERENCE DRAWING ENERGEX

REFERENCE DRAWING ERGON

This document must not be reproduced in part or whole without written permission from ENERGEX or Ergon Energy

energex

© COPYRIGHT 2019 ENERGEX
ENERGEX Corporation Limited
ABN 40 078 849 055

ERGON ENERGY

© COPYRIGHT 2019 ERGON ENERGY
Ergon Energy Corporation Limited
ABN 50 087 646 062

HARD COPY UNCONTROLLED

		Date
Approved Ergon	A. Bletchly	09/08/19
Approved Energex	A. Bletchly	09/08/19
Checked	K. Slater	09/08/19
Drawn	L. Burton / T. Borg	01/11/10

LIGHTING

ASSEMBLIES INDEX

EE DRWG NO: 1-2-1-4
EGX DRWG NO: 10500-A4-1-2-1-4

VOLUME	FOLDER	PAGE	ISSUE
1	2	1-4	0H

ASSY	DESCRIPTION	PAGE
902-8	Lamp - Metal Halide - H35	1-2-902
902-9	Lamp - Metal Halide - H70	1-2-902
902-10	Lamp - Metal Halide - H150	1-2-902
902-11	Lamp - Metal Halide - H250	1-2-902
902-12	Lamp - Metal Halide - H400	1-2-902
902-14	Lamp - Compact Fluorescent - CF32	1-2-902
902-16	Lamp - Linear Fluorescent - LF14	1-2-902
902-17	Lamp - Linear Fluorescent - LF24	1-2-902
902-18	Lamp - Linear Fluorescent - LF36	1-2-902
902-19	Lamp - Metal Halide - H100	1-2-902
903-1	Cutting Compound for Steel Pole	1-2-903
903-5	Cold Galvanising Paint	1-2-903
903-10	Step drill 5 - 35mm	1-2-903
904-1	Fuseholder to wood pole	1-2-904
904-5	Bracket, Holder for PE Cell	1-2-904
905-2	LORA Control Box to Steel Pole	1-2-905
905-5	Antenna to Steel Pole	1-2-905
906-2	Bandit Strap (19mm) to Pole	1-2-906
906-5	Cable Guard to Steel Pole	1-2-906
907-1	Connection SBM Pole to Pit Single Phase	1-2-907
908-1	Connection SBM Pole to Pit Three Phase	1-2-908
909-1	Guard Polymeric (small) to Wood Pole	1-2-909
909-7	Guard Metal (100) to Wood Pole	1-2-909
910-1	Termination 16mm² N/S Cable	1-2-910
910-5	Bridging Cable 25mm² LVABC	1-2-910
913-7	Major Road LED Luminaires L50 Aeroscreen	1-2-913
913-8	Major Road LED Luminaires L50 Aeroscreen	1-2-913
913-9	Major Road LED Luminaires L90 Aeroscreen	1-2-913
913-10	Major Road LED Luminaires L80 Aeroscreen	1-2-913
913-11	Major Road LED Luminaires L170 Aeroscreen	1-2-913
913-12	Major Road LED Luminaires L270 Aeroscreen	1-2-913
913-13	Major Road LED Luminaires L240 Aeroscreen	1-2-913

ASSY	DESCRIPTION	PAGE
914-1	Watchman Floodlight L70	1-2-914
914-2	Watchman Floodlight L100	1-2-914
914-3	Watchman Floodlight L200	1-2-914
914-4	Watchman Floodlight S150	1-2-914
914-5	Watchman Floodlight S250	1-2-914
914-6	Watchman Floodlight S400	1-2-914
914-7	Watchman Floodlight H150	1-2-914
914-8	Watchman Floodlight H250	1-2-914
914-9	Watchman Floodlight H400	1-2-914
915-1	LED Watchman to wood pole	1-2-915
915-2	LED Watchman to steel / concrete pole	1-2-915
916-1	Watchman Floodlight to wood pole	1-2-916
916-2	Watchman Floodlight to steel / concrete pole	1-2-916

A	ORIGINAL ISSUE	
B	03.04.18	
C	27.02.19	
D	05.08.19	

REFERENCE DRAWING ENERGEX

REFERENCE DRAWING ERGON

This document must not be reproduced in part or whole without written permission from ENERGEX or Ergon Energy

energex

© COPYRIGHT 2019 ENERGEX
ENERGEX Corporation Limited
ABN 40 078 849 055

ERGON ENERGY

© COPYRIGHT 2019 ERGON ENERGY
Ergon Energy Corporation Limited
ABN 50 087 646 062

HARD COPY UNCONTROLLED

		Date
Approved Ergon	A. Bletchly	09/08/19
Approved Energex	A. Bletchly	09/08/19
Checked	K. Slater	09/08/19
Drawn	L. Burton / T. Borg	02/03/17

LIGHTING

ASSEMBLIES INDEX

EE DRWG NO: 1-2-1-5	VOLUME	FOLDER	PAGE	ISSUE
EGX DRWG NO: 10500-A4-1-2-1-5	1	2	1-5	0D

MATERIAL

ENERGEX SC	QTY 800-1	ERGON SC
14864	1 / 1	2403730

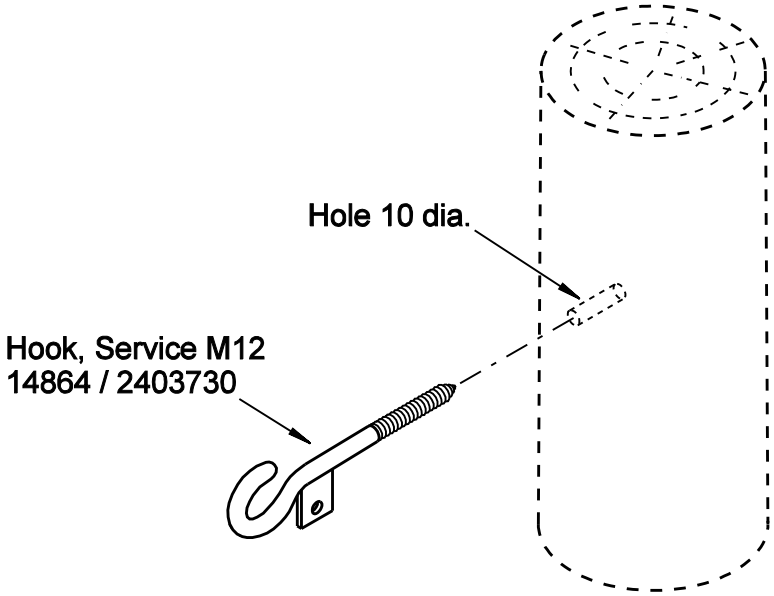

ASSEMBLY 800-1 HOOK SERVICE TO WOOD POLE

MATERIAL

ENERGEX SC	QTY 800-6	QTY 800-7	QTY 800-8	ERGON SC
Nil		- / 1		1712911
15257	1 / 1	- / 1	- / 1	1728507
08529	1 / 1			2400040
Nil			- / 1	2400662

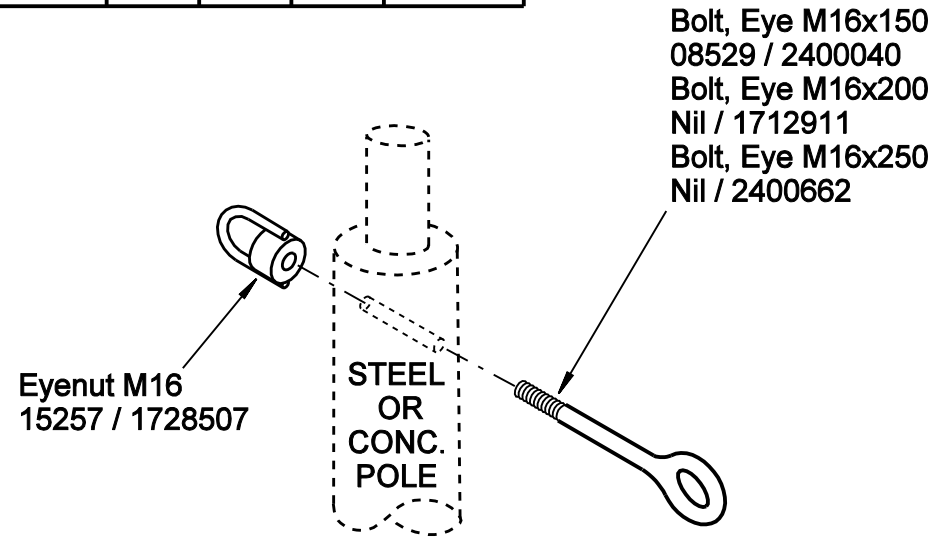

ASSEMBLY 800-6 EYEBOLT AND EYENUT M16x150 TO STREET LIGHT POLE

ASSEMBLY 800-7 EYEBOLT AND EYENUT M16x200 TO STREET LIGHT POLE

ASSEMBLY 800-8 EYEBOLT AND EYENUT M16x250 TO STREET LIGHT POLE

A	ORIGINAL ISSUE

REFERENCE DRAWING ENERGEX: NIL

REFERENCE DRAWING ERGON: 5 82 8000 1

This document must not be reproduced in part or whole without written permission from ENERGEX or Ergon Energy

energex

© COPYRIGHT 2002 ENERGEX
ENERGEX Corporation Limited
ABN 40 078 849 055

ERGON. ENERGY

© COPYRIGHT 2002 ERGON ENERGY
Ergon Energy Corporation Limited
ABN 50 087 646 062

HARD COPY UNCONTROLLED

		Date
Approved Ergon	J. Brooks	14/10/10
Approved Energex	R. English	14/10/10
Checked	D. Taylor / B. Oyegoke	14/10/10
Drawn	L. Burton / T. Borg	30/09/10

LIGHTING
ASSEMBLIES
SERVICE HOOK TO POLE
EYEBOLT TO STREETLIGHT POLE

EE DRWG NO: 1-2-800
EGX DRWG NO: 10500-A4-1-2-800

VOLUME	FOLDER	PAGE	ISSUE
1	2	800	0A

MATERIAL

ENERGEX SC	QTY 801-1	QTY 801-2	QTY 801-5	ERGON SC
04434	1 / 1			0124002
22313		1 / 1		2406250
04451			1 / 1	0408931

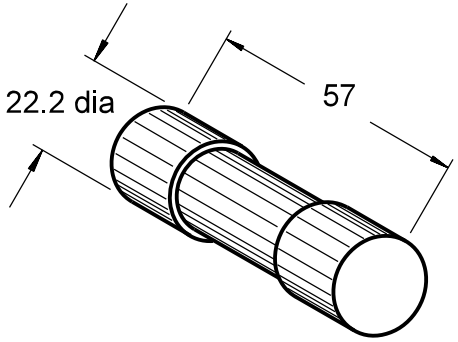

ASSEMBLY 801-1 CARTRIDGE FUSE LINK 32A HRC

ASSEMBLY 801-2 CARTRIDGE FUSE LINK 20A HRC

ASSEMBLY 801-5 CARTRIDGE FUSE LINK 80A HRC

MATERIAL

ENERGEX SC	QTY 801-6	ERGON SC
19910	1 / 1	0426142

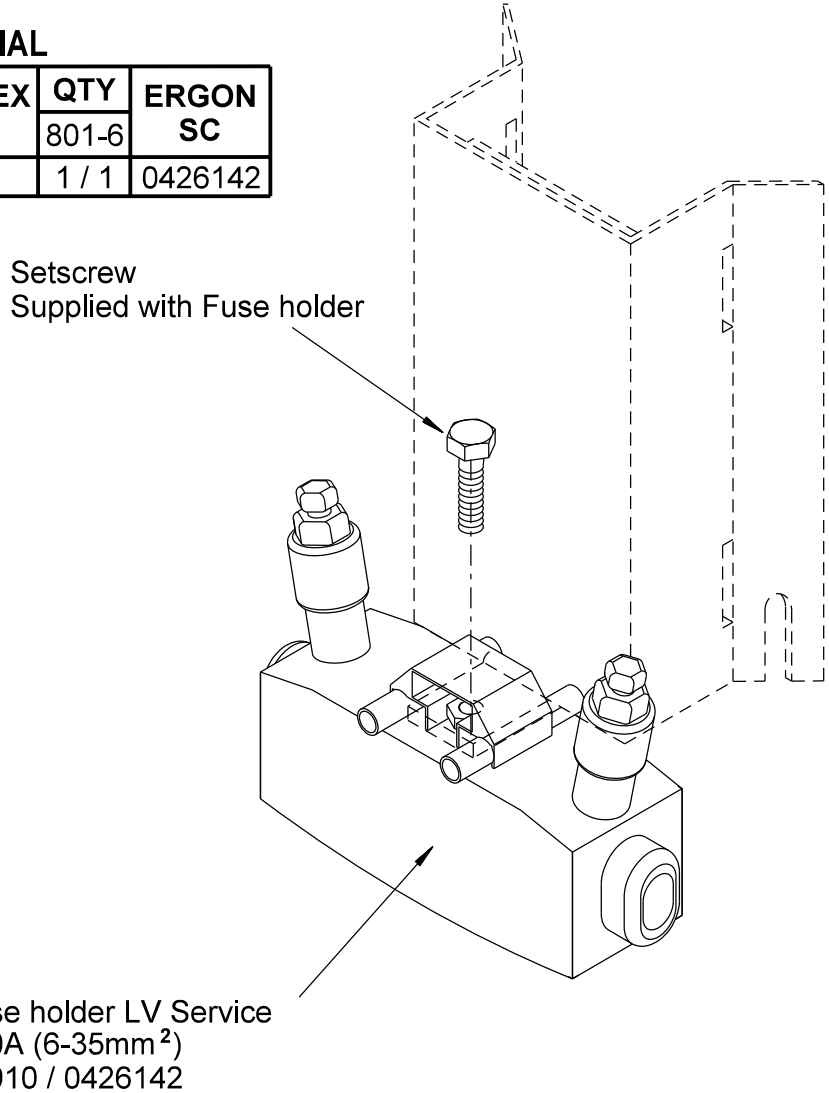

ASSEMBLY 801-6 FUSE HOLDER 100A (SERVICE) TO BRACKET

A	ORIGINAL ISSUE	
B	12.09.13	
C	30.07.14	
D	16.12.16	

REFERENCE DRAWING ENERGEX: NIL

REFERENCE DRAWING ERGON: 5 82 8001 1

This document must not be reproduced in part or whole without written permission from ENERGEX or Ergon Energy

energex

© COPYRIGHT 2002 ENERGEX
ENERGEX Corporation Limited
ABN 40 078 849 055

ERGON ENERGY

© COPYRIGHT 2002 ERGON ENERGY
Ergon Energy Corporation Limited
ABN 50 087 646 062

HARD COPY UNCONTROLLED

Approved Ergon	C. Noel	19/04/17
Approved Energex	F. Zaini	19/04/17
Checked	P. Relf / A. Bletchly	01/04/17
Drawn	L. Burton / T. Borg	30/09/10

LIGHTING
ASSEMBLIES
LOW VOLTAGE FUSE LINK
SERVICE FUSE HOLDER TO BRACKET

EE DRWG NO: 1-2-801
EGX DRWG NO: 10500-A4-1-2-801

VOLUME	FOLDER	PAGE	ISSUE
1	2	801	0D

MATERIAL

ENERGEX SC	QTY 802-1	ERGON SC
16566	1 / 1	0414092

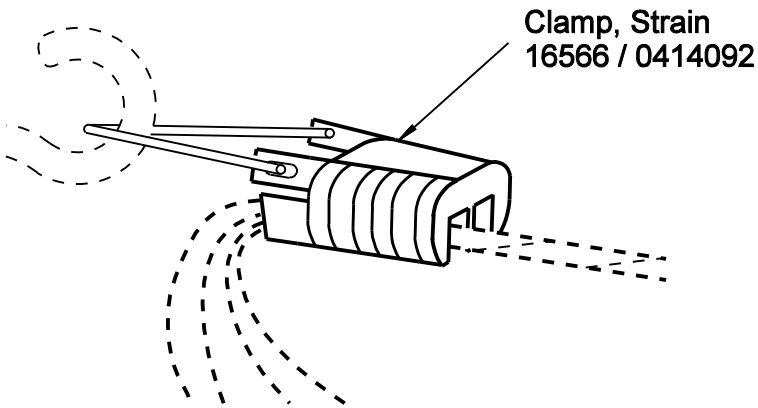

ASSEMBLY 802-1 CLAMP STRAIN TO SERVICE HOOK

MATERIAL

ENERGEX SC	QTY 802-6	ERGON SC
16576	1 / 1	0406226
00684	2 / 2	1757894
01044	2 / 2	1777542

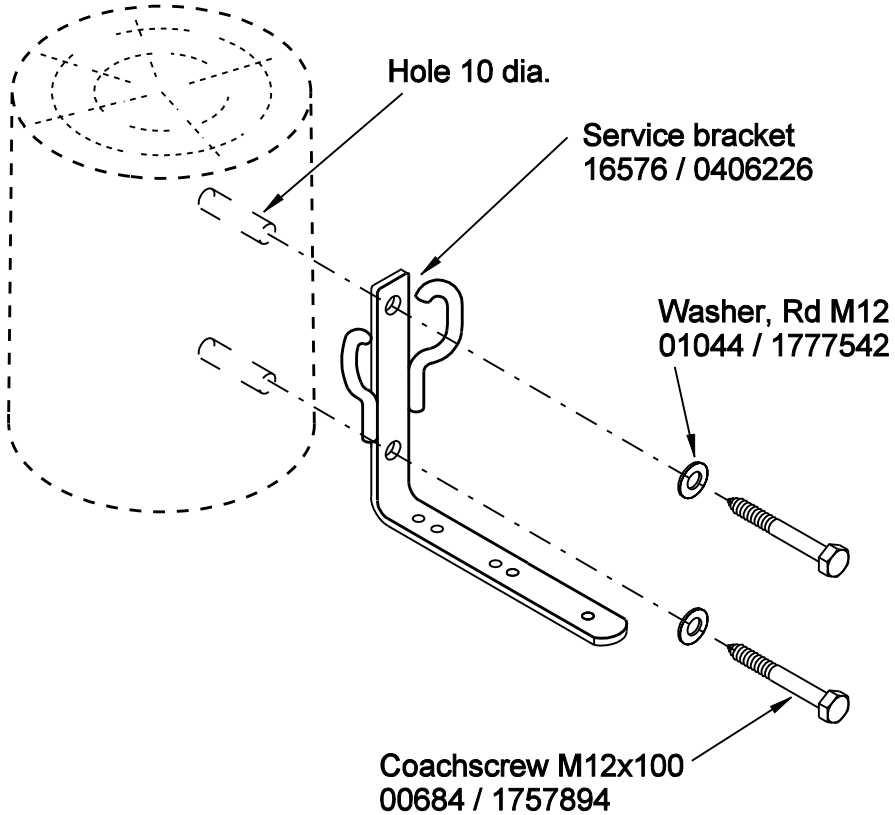

ASSEMBLY 802-6 BRACKET (SERVICE FUSE) TO WOOD POLE

A	ORIGINAL ISSUE	REFERENCE DRAWING ENERGEX: 4927-A4-5.1	energex	ERGON. ENERGY	Approved Ergon: J. Brooks — Date: 14/10/10
		REFERENCE DRAWING ERGON: 5 82 8002 1	© COPYRIGHT 2002 ENERGEX ENERGEX Corporation Limited ABN 40 078 849 055	©COPYRIGHT 2002 ERGON ENERGY Ergon Energy Corporation Limited ABN 50 087 646 062	Approved Energex: R. English — Date: 14/10/10
		This document must not be reproduced in part or whole without written permission from ENERGEX or Ergon Energy	HARD COPY UNCONTROLLED		Checked: D. Taylor / B. Oyegoke — Date: 14/10/10
					Drawn: L. Burton / T. Borg — Date: 30/09/10

LIGHTING
ASSEMBLIES
STRAIN CLAMP TO SERVICE HOOK
SERVICE FUSE BRACKET TO POLE

EE DRWG NO: 1-2-802	VOLUME	FOLDER	PAGE	ISSUE
EGX DRWG NO: 10500-A4-1-2-802	1	2	802	0A

MATERIAL

ENERGEX SC	QTY 803-1	QTY 803-3	ERGON SC
04928	1 / 1	NIL	0431542
04929	NIL	1 / 1	2173024
11430	2 / 1	2 / 2	0104435

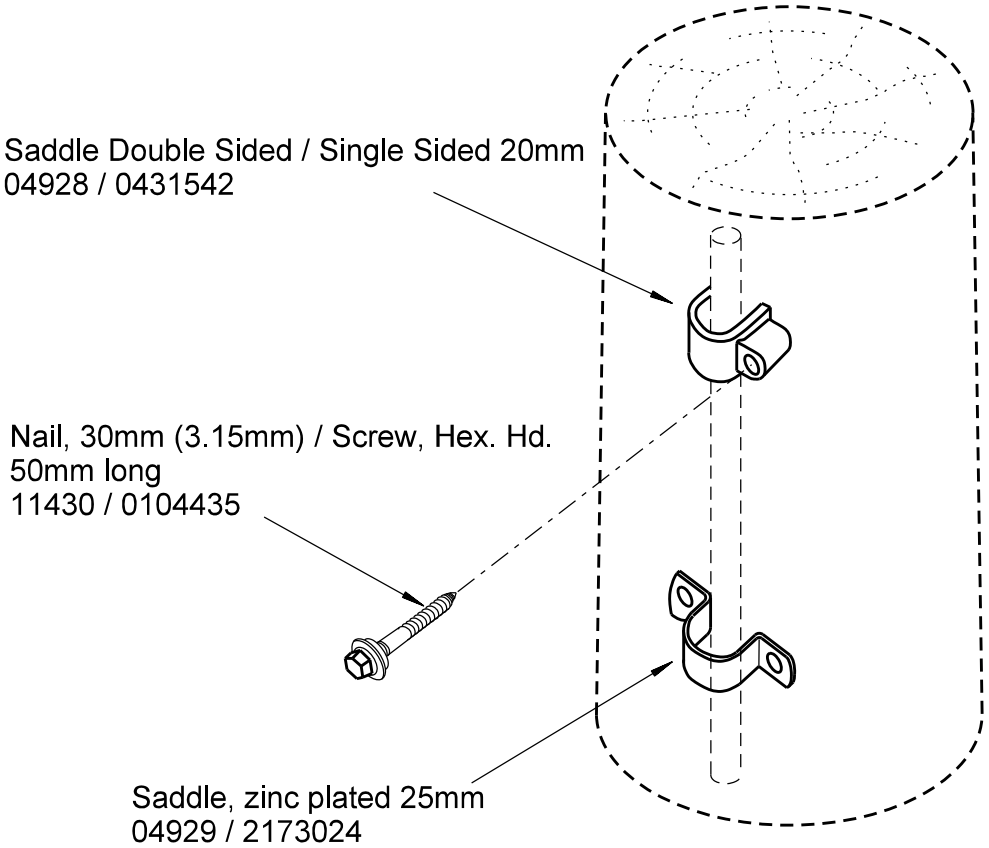

ASSEMBLY 803-1 SADDLE (20mm) TO WOOD POLE

ASSEMBLY 803-3 SADDLE ZINC PLATED 25mm

MATERIAL

ENERGEX SC	QTY 803-6	ERGON SC
12466	1 / 1	0104210
20652	2 / 2	2406888

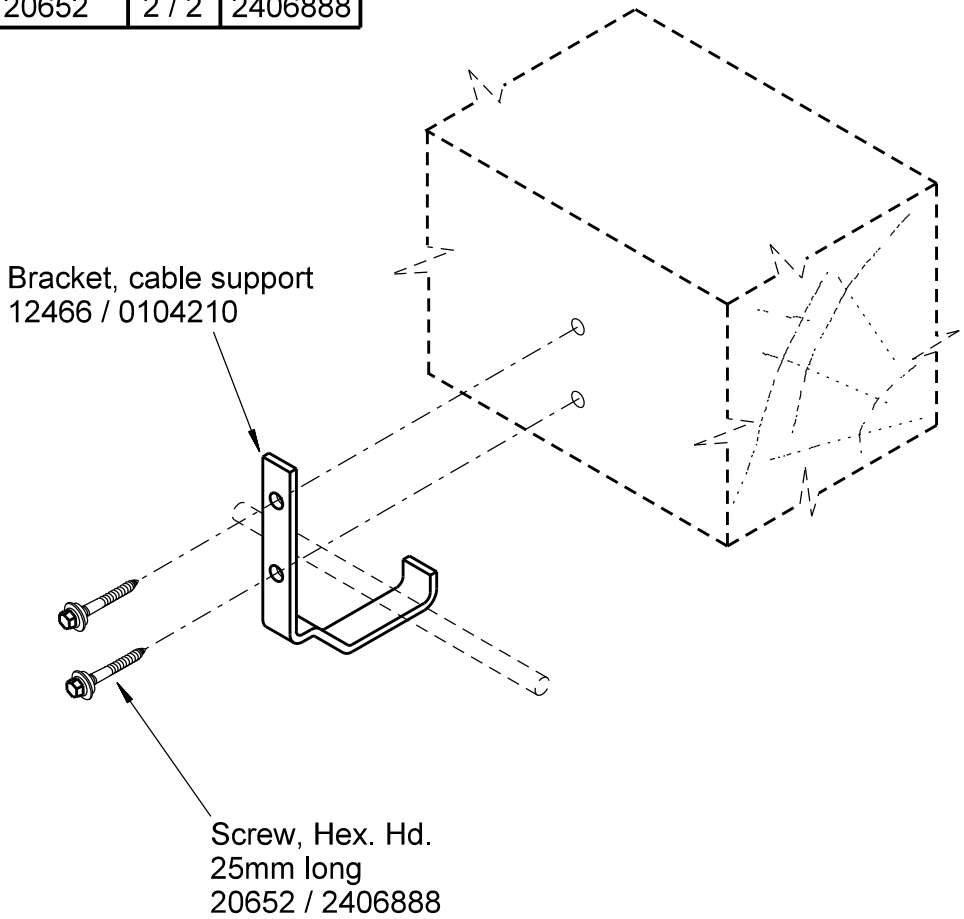

ASSEMBLY 803-6 BRACKET CABLE SUPPORT TO X-ARM

A	ORIGINAL ISSUE	REFERENCE DRAWING ENERGEX: NIL	Approved Ergon: J. Brooks 01/04/16
B	14.11.14	REFERENCE DRAWING ERGON: 5 82 8003 1	Approved Energex: R. English 01/04/16
			Checked: D. Taylor / B. Oyegoke 01/04/16
			Drawn: L. Burton / T. Borg 30/09/10

energex

© COPYRIGHT 2002 ENERGEX
ENERGEX Corporation Limited
ABN 40 078 849 055

ERGON ENERGY

© COPYRIGHT 2002 ERGON ENERGY
Ergon Energy Corporation Limited
ABN 50 087 646 062

This document must not be reproduced in part or whole without written permission from ENERGEX or Ergon Energy

HARD COPY UNCONTROLLED

LIGHTING
ASSEMBLIES
SADDLE TO POLE
CABLE SUPPORT BRACKET TO CROSSARM

EE DRWG NO: 1-2-803	VOLUME	FOLDER	PAGE	ISSUE
EGX DRWG NO: 10500-A4-1-2-803	1	2	803	0B

MATERIAL

ENERGEX SC	QTY 804-1	ERGON SC
10603	1 / 1	0411207

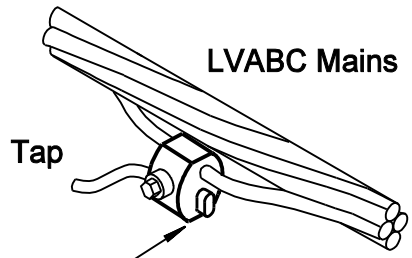

Connector, IPC 25mm² to 95mm² ABC mains
6mm² to 35mm² LVABC tap.
10603 / 0411207

ASSEMBLY 804-1 CONNECTOR I.P.C. 25/95mm² MAIN TO 6/35mm² TAP

MATERIAL

ENERGEX SC	QTY 804-2	ERGON SC
16569	1 / -	Nil

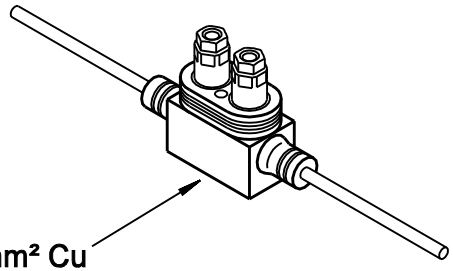

Connector
6-35mm² Al / 4-35mm² Cu
16569 / Nil

ASSEMBLY 804-2 CONNECTOR 6-35mm² Al / 4-35mm² Cu

MATERIAL

ENERGEX SC	QTY 804-6	QTY 804-7	ERGON SC
16567	1 / 1		0414121
16568		1 / 1	0414131

Tap-off Connector
16567 / 0414121
16568 / 0414131

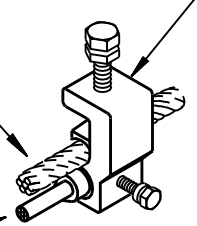

ASSEMBLY 804-6 CONNECTOR TAP-OFF BARE Al MAIN 10-35mm² TO 6/35mm² ABC TAP

ASSEMBLY 804-7 CONNECTOR TAP-OFF BARE Cu MAIN 25-95mm² TO 6/35mm² ABC TAP

A	ORIGINAL ISSUE

REFERENCE DRAWING ENERGEX: NIL

REFERENCE DRAWING ERGON: 5 82 8004 1

This document must not be reproduced in part or whole without written permission from ENERGEX or Ergon Energy

energex

© COPYRIGHT 2002 ENERGEX
ENERGEX Corporation Limited
ABN 40 078 849 055

ERGON. ENERGY

© COPYRIGHT 2002 ERGON ENERGY
Ergon Energy Corporation Limited
ABN 50 087 646 062

HARD COPY UNCONTROLLED

		Date
Approved Ergon	J. Brooks	14/10/10
Approved Energex	R. English	14/10/10
Checked	D. Taylor / B. Oyegoke	14/10/10
Drawn	L. Burton / T. Borg	30/09/10

LIGHTING
ASSEMBLIES
INSULATION PIERCING CONNECTORS

EE DRWG NO: 1-2-804
EGX DRWG NO: 10500-A4-1-2-804

VOLUME	FOLDER	PAGE	ISSUE
1	2	804	0A

MATERIAL

ENERGEX SC	QTY	ERGON SC
	805-1	
06616	1 / 1	0104207

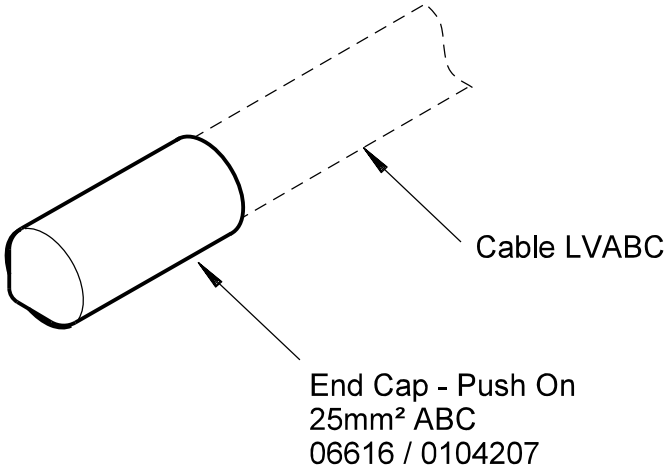

NOTES:

1. End cap to be applied in accordance with manufacturers' installation instructions.

ASSEMBLY 805-1 END CAP - PUSH ON 25mm² ABC

MATERIAL

ENERGEX SC	QTY		ERGON SC
	805-6	805-8	
04838	1 / 1	NIL	2113005
18030	NIL	1 / 1	2113013

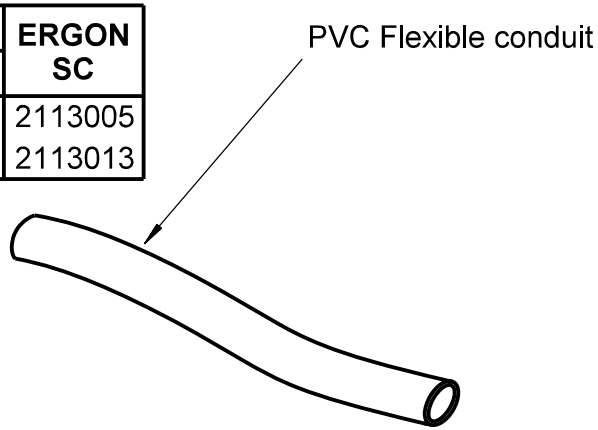

ASSEMBLY 805-6 CONDUIT PVC FLEXIBLE - 16mm

ASSEMBLY 805-8 CONDUIT PVC FLEXIBLE - 20mm

MATERIAL

ENERGEX SC	QTY		ERGON SC
	805-10	805-12	
NIL	- / 1	- / -	2402765
NIL	- / -	- / 1	2400389

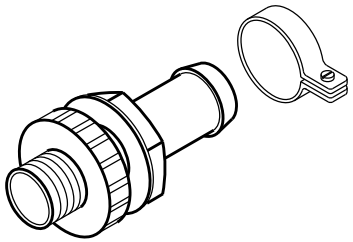

ASSEMBLY 805-10 TERMINATOR CONDUIT PVC FLEXIBLE 16mm

ASSEMBLY 805-12 TERMINATOR CONDUIT PVC FLEXIBLE 20mm

A	ORIGINAL ISSUE	REFERENCE DRAWING ENERGEX: NIL	energex	Approved Ergon: C. Noel	Date: 01/04/16
B	23.10.14	REFERENCE DRAWING ERGON: 5 82 8005 1	ERGON ENERGY	Approved Energex: R. English	Date: 01/04/16
		This document must not be reproduced in part or whole without written permission from ENERGEX or Ergon Energy	© COPYRIGHT 2002 ENERGEX ENERGEX Corporation Limited ABN 40 078 849 055	Checked: D. Taylor / B. Oyegoke	Date: 01/04/16
			© COPYRIGHT 2002 ERGON ENERGY Ergon Energy Corporation Limited ABN 50 087 646 062	Drawn: L. Burton / T. Borg	Date: 30/09/10

HARD COPY UNCONTROLLED

LIGHTING
ASSEMBLIES
END CAP - PUSH ON
CONDUIT PVC FLEXIBLE, TERMINATOR

EE DRWG NO: 1-2-805	VOLUME	FOLDER	PAGE	ISSUE
EGX DRWG NO: 10500-A4-1-2-805	1	2	805	0B

MATERIAL

ENERGEX SC	QTY								ERGON SC
	806-1	806-2	806-3	806-4	806-9	806-10	806-11	806-12	
21576	1 / 1								2403262
21577		1 / 1							1150251
21578			1 / 1						1150253
21579				1 / 1					1150285
22770					1 / 1				2438158
21584						1 / 1			2433399
21585							1 / 1		2433407
21586								1 / -	NIL

Luminaire

S100 Normal 21576 / 2403262	H100 Normal 22770 / 2438158
S150 Normal 21577 / 1150251	H150 Normal 21584 / 2433399
S250 Normal 21578 / 1150253	H250 Normal 21585 / 2433407
S400 Normal 21579 / 1150285	H400 Normal 21586 / NIL

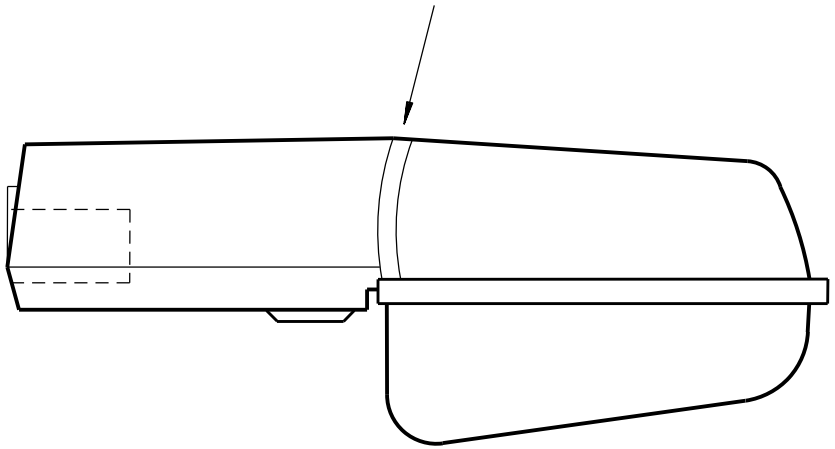

Notes

1. Luminaires are supplied complete with lamp and PE cell fitted.
2. PE Cell assembly 901-2 and lamp assembly 902-2 to 902-5 & 902-10 to 902-12 & 902-19 are provided for maintenance spares.

ASSEMBLY 806-1 MAJOR ROAD LUMINAIRE S100 NORMAL
ASSEMBLY 806-2 MAJOR ROAD LUMINAIRE S150 NORMAL
ASSEMBLY 806-3 MAJOR ROAD LUMINAIRE S250 NORMAL
ASSEMBLY 806-4 MAJOR ROAD LUMINAIRE S400 NORMAL
ASSEMBLY 806-9 MAJOR ROAD LUMINAIRE H100 NORMAL
ASSEMBLY 806-10 MAJOR ROAD LUMINAIRE H150 NORMAL
ASSEMBLY 806-11 MAJOR ROAD LUMINAIRE H250 NORMAL
ASSEMBLY 806-12 MAJOR ROAD LUMINAIRE H400 NORMAL

A	ORIGINAL ISSUE	REFERENCE DRAWING ENERGEX: NIL	energex	ERGON ENERGY	Approved Ergon: C. Noel 19/04/17	**LIGHTING** ASSEMBLIES MAJOR ROAD LUMINAIRES NORMAL
B	27.02.13	REFERENCE DRAWING ERGON: 5 82 8006 1	© COPYRIGHT 2002 ENERGEX ENERGEX Corporation Limited ABN 40 078 849 055	© COPYRIGHT 2002 ERGON ENERGY Ergon Energy Corporation Limited ABN 50 087 646 062	Approved Energex: F. Zaini 19/04/17	
C	18.09.13				Checked: P. Relf / A. Bletchly 01/04/17	
D	26.10.16	This document must not be reproduced in part or whole without written permission from ENERGEX or Ergon Energy	HARD COPY UNCONTROLLED		Drawn: L. Burton / T. Borg 30/09/10	EE DRWG NO: 1-2-806 EGX DRWG NO: 10500-A4-1-2-806

VOLUME	FOLDER	PAGE	ISSUE
1	2	806	0D

MATERIAL

ENERGEX SC	QTY 807-1	ERGON SC
04838	- / 1	2113005
17119	- / 1	1420068

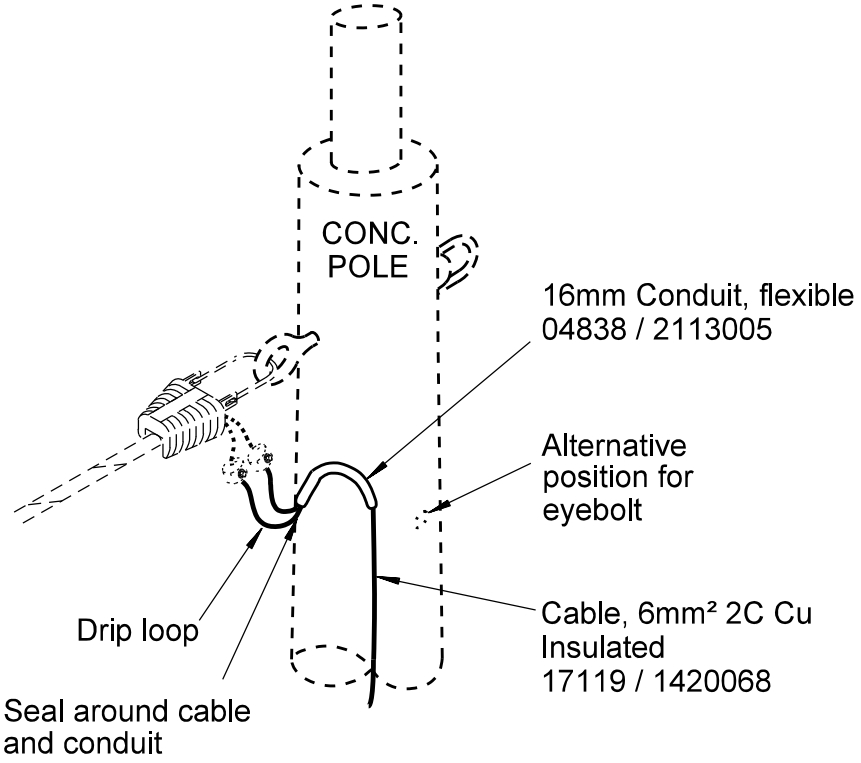

ASSEMBLY 807-1 **MAJOR ROAD SUPPLY TO TERMINAL PANEL CONC. POLE**

MATERIAL

ENERGEX SC	QTY 807-6	ERGON SC
15487	1 / 1	2406972
17119	1 / 1	1420068

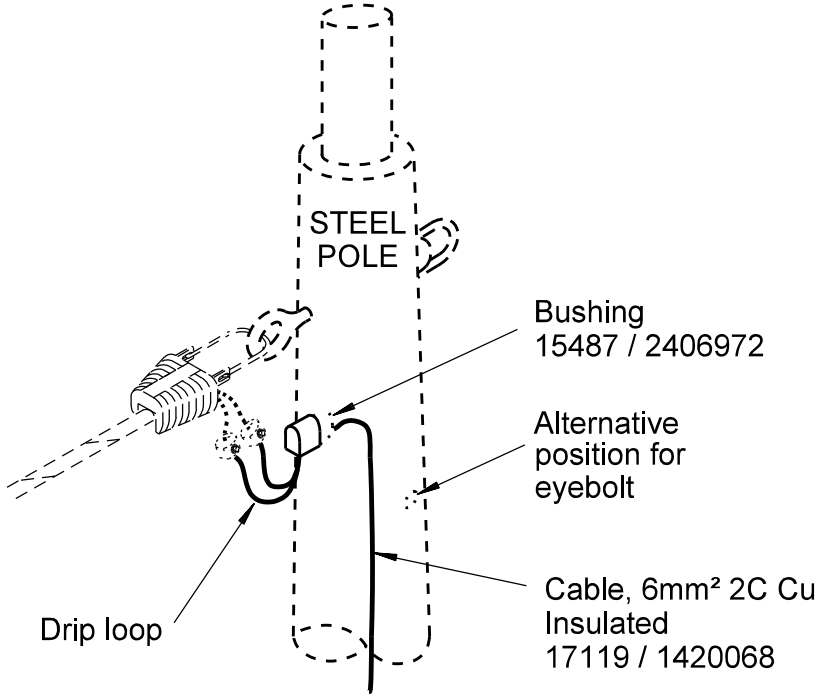

ASSEMBLY 807-6 **MAJOR ROAD SUPPLY TO TERMINAL PANEL STEEL POLE**

A	ORIGINAL ISSUE	REFERENCE DRAWING ENERGEX: NIL	energex	ERGON ENERGY	Approved Ergon: C. Noel — Date: 24/04/13
B	07.01.13	REFERENCE DRAWING ERGON: 5 82 8007 1	© COPYRIGHT 2002 ENERGEX ENERGEX Corporation Limited ABN 40 078 849 055	© COPYRIGHT 2002 ERGON ENERGY Ergon Energy Corporation Limited ABN 50 087 646 062	Approved Energex: F. Zaini — Date: 24/04/13
		This document must not be reproduced in part or whole without written permission from ENERGEX or Ergon Energy	HARD COPY UNCONTROLLED		Checked: P. Relf / A. Bletchly — Date: 04/04/13
					Drawn: L. Burton / T. Borg — Date: 30/09/10

LIGHTING
ASSEMBLIES
MAJOR ROAD - CONCRETE / STEEL POLES
SUPPLY TO TERMINAL WIRING

EE DRWG NO: 1-2-807
EGX DRWG NO: 10500-A4-1-2-807

VOLUME	FOLDER	PAGE	ISSUE
1	2	807	0B

MATERIAL

ENERGEX SC	QTY 808-1	QTY 808-2	QTY 808-3	ERGON SC
05734	1 / 1			2403718
05750		1 / 1	1 / 1	1104685
16824			1 / 1	1104682

ASSEMBLY 808-1 MAJOR ROAD OUTREACH ARM 1.5m SINGLE

ASSEMBLY 808-2 MAJOR ROAD OUTREACH ARM 3.0m SINGLE

ASSEMBLY 808-3 MAJOR ROAD OUTREACH ARM 4.5m SINGLE

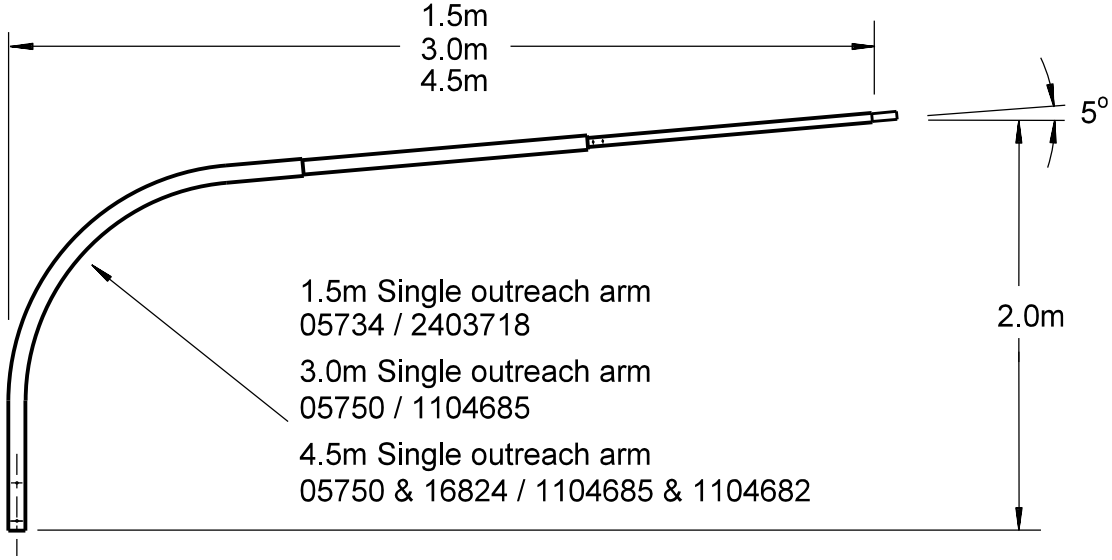

MATERIAL

ENERGEX SC	QTY 808-4	QTY 808-5	QTY 808-6	ERGON SC
05728	1 / 1			2403723
05747		1 / 1	1 / 1	2405754
16824			2 / 2	1104682

ASSEMBLY 808-4 MAJOR ROAD OUTREACH ARM 1.5m DOUBLE

ASSEMBLY 808-5 MAJOR ROAD OUTREACH ARM 3.0m DOUBLE

ASSEMBLY 808-6 MAJOR ROAD OUTREACH ARM 4.5m DOUBLE

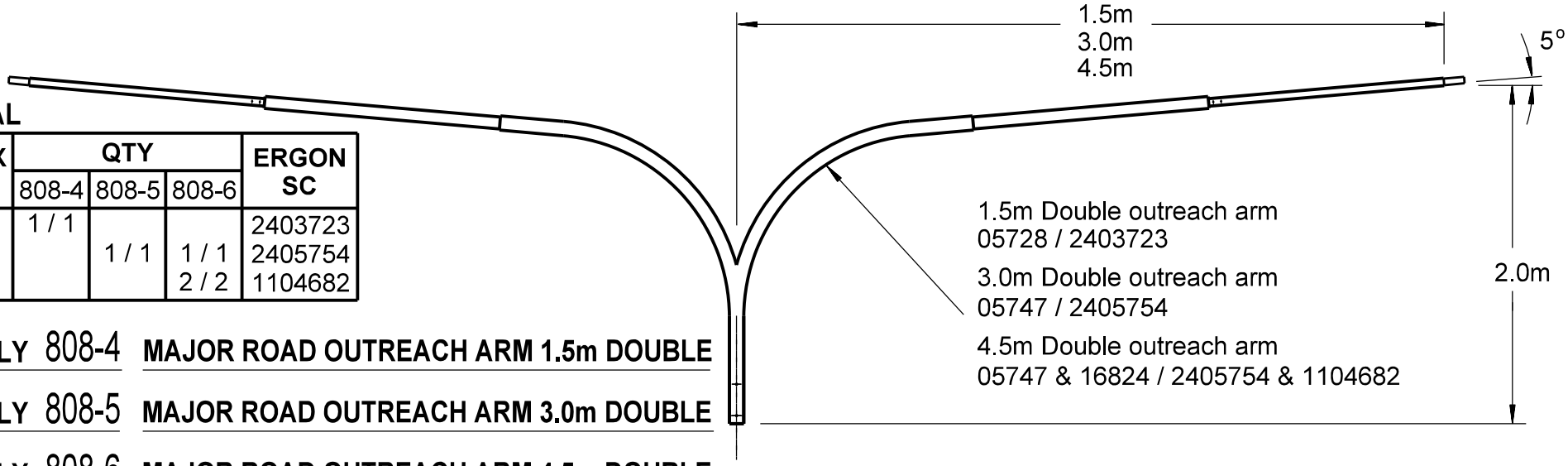

A	ORIGINAL ISSUE	REFERENCE DRAWING ENERGEX: NIL	energex	ERGON ENERGY	Approved Ergon: C. Noel, Date: 01/05/18
B	26.10.16	REFERENCE DRAWING ERGON: 8 82 8008 1	© COPYRIGHT 2002 ENERGEX ENERGEX Corporation Limited ABN 40 078 849 055	© COPYRIGHT 2002 ERGON ENERGY Ergon Energy Corporation Limited ABN 50 087 646 062	Approved Energex: F. Zaini, Date: 01/05/18
C	22.03.18				Checked: P. Relf / A. Bletchly, Date: 01/05/18
		This document must not be reproduced in part or whole without written permission from ENERGEX or Ergon Energy	HARD COPY UNCONTROLLED		Drawn: L. Burton / T. Borg, Date: 30/09/10

LIGHTING
ASSEMBLIES
MAJOR ROAD
OUTREACH ARMS

EE DRWG NO: 1-2-808	VOLUME	FOLDER	PAGE	ISSUE
EGX DRWG NO: 10500-A4-1-2-808	1	2	808	0C

MATERIAL

ENERGEX SC	QTY				ERGON SC
	809-6	809-7	809-8	809-9	
05637	1 / 1				2401888
05639		1 / 1			2401889
05641			1 / 1		2401890
05645				1 / 1	2433696

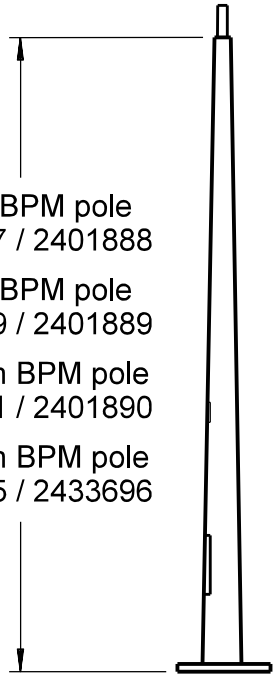

ASSEMBLY 809-6 MAJOR ROAD POLE 7.0m BASE PLATE MOUNTED STEEL

ASSEMBLY 809-7 MAJOR ROAD POLE 8.5m BASE PLATE MOUNTED STEEL

ASSEMBLY 809-8 MAJOR ROAD POLE 10.0m BASE PLATE MOUNTED STEEL

ASSEMBLY 809-9 MAJOR ROAD POLE 13.0m BASE PLATE MOUNTED STEEL

A	ORIGINAL ISSUE	REFERENCE DRAWING ENERGEX: NIL	energex	ERGON ENERGY	Approved Ergon: J. Brooks 01/04/16
B	15.03.16	REFERENCE DRAWING ERGON: 5 82 8009 1	© COPYRIGHT 2002 ENERGEX ENERGEX Corporation Limited ABN 40 078 849 055	©COPYRIGHT 2002 ERGON ENERGY Ergon Energy Corporation Limited ABN 50 087 646 062	Approved Energex: R. English 01/04/16
		This document must not be reproduced in part or whole without written permission from ENERGEX or Ergon Energy	HARD COPY UNCONTROLLED		Checked: D. Taylor / B. Oyegoke 01/04/16
					Drawn: L. Burton / T. Borg 30/09/10

LIGHTING
ASSEMBLIES
MAJOR ROAD - BURIED IN GROUND CONCRETE
BASE PLATE MOUNTED STEEL POLE

EE DRWG NO: 1-2-809	VOLUME	FOLDER	PAGE	ISSUE
EGX DRWG NO: 10500-A4-1-2-809	1	2	809	0B

MATERIAL

ENERGEX SC	QTY 810-2	ERGON SC
14108	1 / 1	0924066
17121	AR	2406677
17030	1 / 1	2406976

NOTES:

1. Concrete not included in material.
   Min. concrete volume:
   600 dia foundation = 0.64m³
2. Prepare and place concrete in accordance with Section 17 of AS3600:2009.
3. Concrete shall be grade 25MPa.
   Place concrete into Auger hole without form.
4. Minimum cover to reinforcement, 65mm.
   Use nearest oversize Auger.
5. Orientate hold down bolts in footing with the 2 bolts nearest road, parallel to road.
6. Locate conduit/s and bend/s to exit top of footing on pole ℄ and exit side/s of footing to suit direction of incoming conduit/s.
7. Suitable for most soils other than:-
   (i) Loose sand (commonly occurring in sand dunes).
   (ii) Swampy silt deposits (commonly occurring in swamps, coastal salt pans and mud flats).
   (iii) Loose, uncompacted fill material.
   (iv) Clay with shear strength less than 50kPA
   Seek structural engineers advice on foundation design for unsuitable soils.
8. If installed in an overhead supply area then securely plug conduit to avoid ingress of soil.

DIMENSIONS

DIM 'A':
750mm min. footpath (Ergon)
600mm min. footpath (Energex)

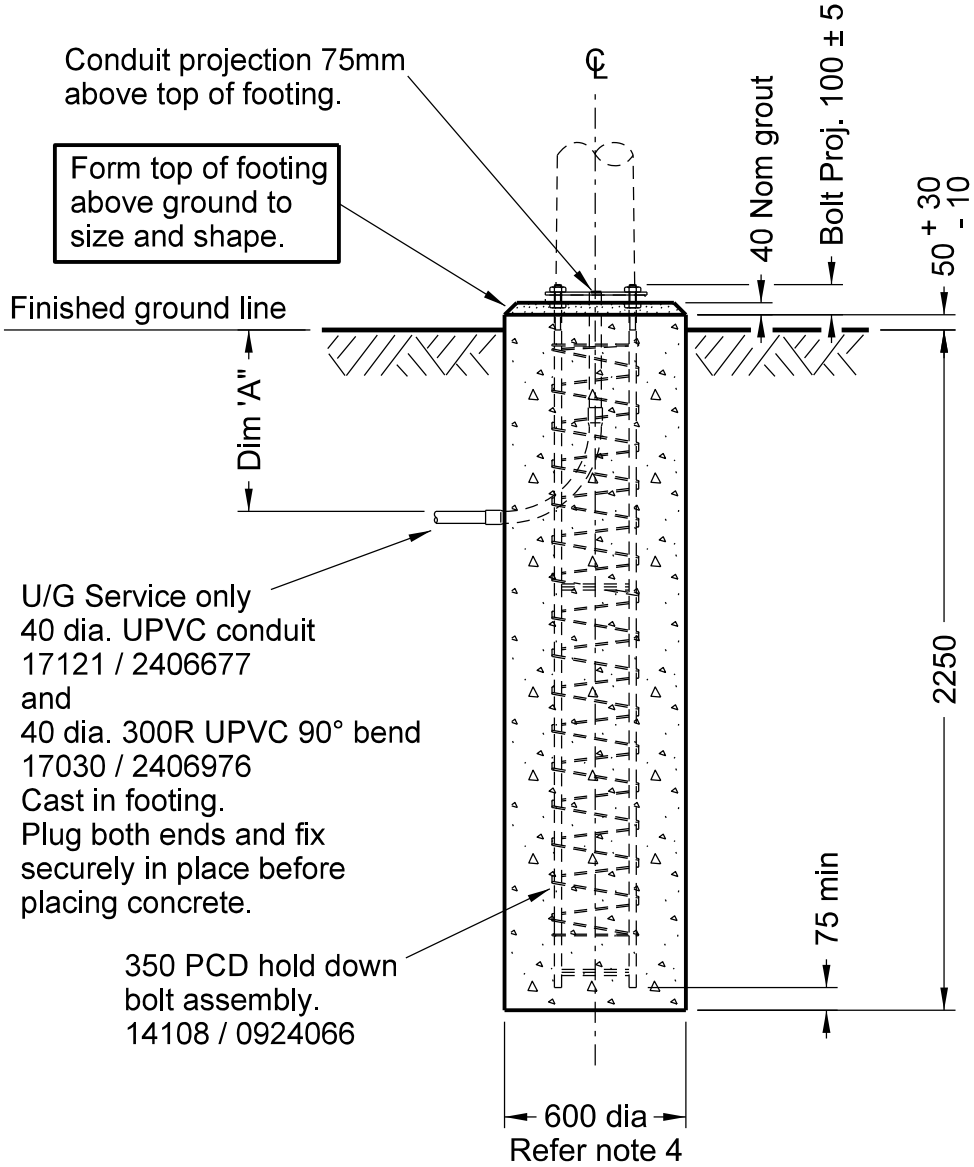

ASSEMBLY 810-2 MAJOR ROAD FOUNDATION 350 PCD BPM STEEL POLE

A	ORIGINAL ISSUE	
B	07.01.13	
C	12.09.13	
D	20.10.14	

REFERENCE DRAWING ENERGEX: NIL

REFERENCE DRAWING ERGON: 5 82 8010 1

This document must not be reproduced in part or whole without written permission from ENERGEX or Ergon Energy

energex

© COPYRIGHT 2002 ENERGEX
ENERGEX Corporation Limited
ABN 40 078 849 055

ERGON ENERGY

© COPYRIGHT 2002 ERGON ENERGY
Ergon Energy Corporation Limited
ABN 50 087 646 062

HARD COPY UNCONTROLLED

		Date
Approved Ergon	C. Noel	01/04/16
Approved Energex	F. Zaini	01/04/16
Checked	P. Relf / A. Bletchly	01/04/16
Drawn	L. Burton / T. Borg	30/09/10

LIGHTING
ASSEMBLIES
MAJOR ROAD
BPM STEEL POLE FOUNDATION 350 PCD

EE DRWG NO: 1-2-810
EGX DRWG NO: 10500-A4-1-2-810

VOLUME	FOLDER	PAGE	ISSUE
1	2	810	0D

MATERIAL

ENERGEX SC	QTY 811-1	ERGON SC
Nil	AR	0184880
10412	1 / 1	1103815
07112	AR	2403244
Nil	- / 1	2427359

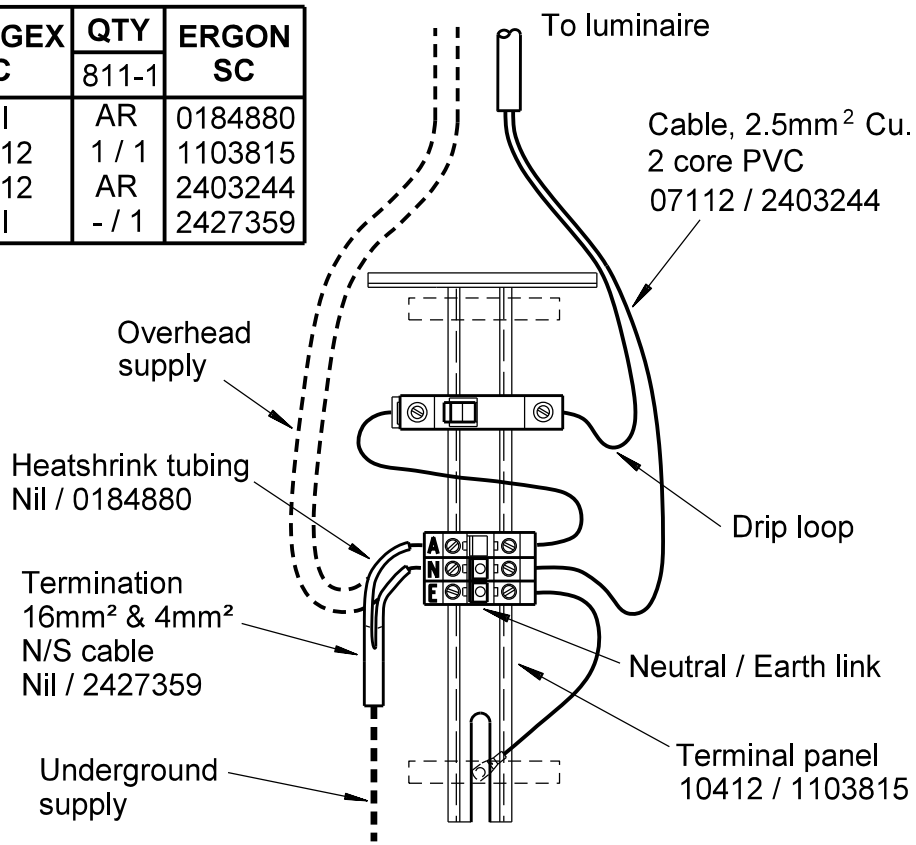

NOTES:

1. To provide a permanent earth attachment to pole, assemble lug, 1 flat washer, 1 spring washer, 1 nut and 1 flat washer under terminal panel.

ASSEMBLY 811-1 MAJOR ROAD TERMINAL PANEL AND CABLE TO SINGLE OUTREACH ARM

MATERIAL

ENERGEX SC	QTY 811-2	ERGON SC
Nil	AR	0184880
10412	1 / 1	1103815
07112	AR	2403244
07133	75mm	1542773
15885	1 / 1	2402333
Nil	- / 1	2427359

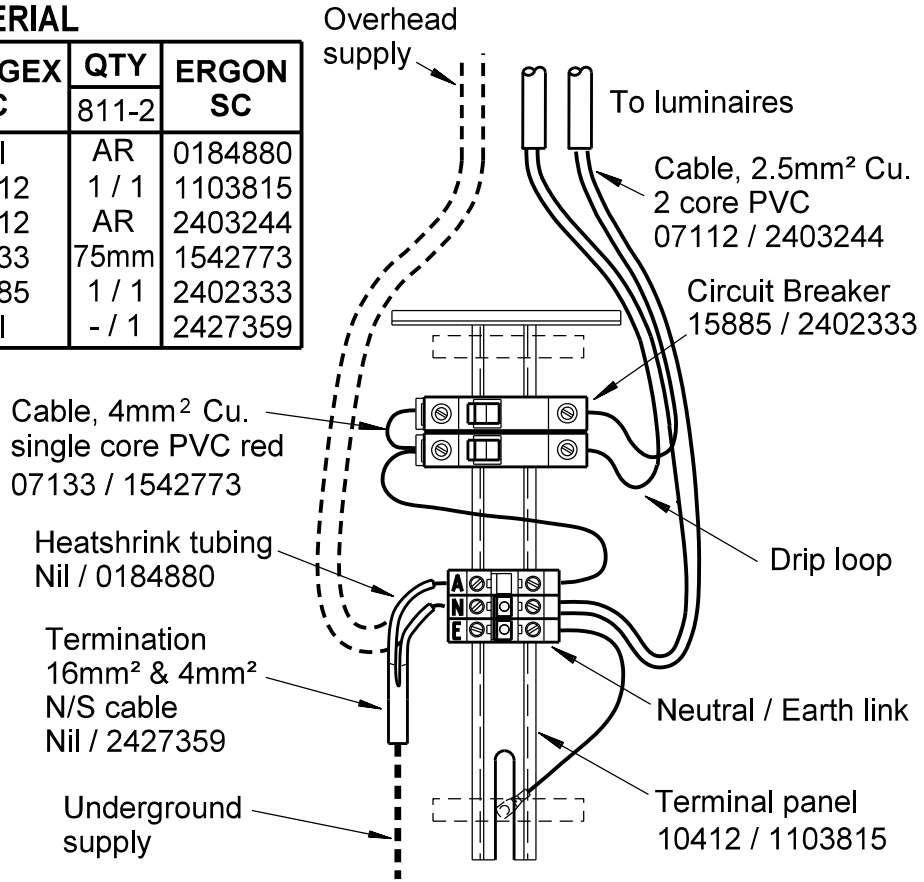

NOTES:

1. To provide a permanent earth attachment to pole, assemble lug, 1 flat washer, 1 spring washer, 1 nut and 1 flat washer under terminal panel.

ASSEMBLY 811-2 MAJOR ROAD TERMINAL PANEL AND CABLE TO DOUBLE OUTREACH ARM

A	ORIGINAL ISSUE	REFERENCE DRAWING ENERGEX: NIL	energex	ERGON ENERGY	Approved Ergon: C. Noel — Date: 24/04/13
B	07.01.13	REFERENCE DRAWING ERGON: 5 82 8011 1	© COPYRIGHT 2002 ENERGEX ENERGEX Corporation Limited ABN 40 078 849 055	©COPYRIGHT 2002 ERGON ENERGY Ergon Energy Corporation Limited ABN 50 087 646 062	Approved Energex: F. Zaini — Date: 24/04/13
		This document must not be reproduced in part or whole without written permission from ENERGEX or Ergon Energy	HARD COPY UNCONTROLLED		Checked: P. Relf / A. Bletchly — Date: 04/04/13
					Drawn: L. Burton / T. Borg — Date: 30/09/10

LIGHTING
ASSEMBLIES
MAJOR ROAD
TERMINAL PANELS

EE DRWG NO: 1-2-811
EGX DRWG NO: 10500-A4-1-2-811

VOLUME	FOLDER	PAGE	ISSUE
1	2	811	0B

MATERIAL

ENERGEX SC	QTY 812-1	ERGON SC
06514	1 / 1	2406976

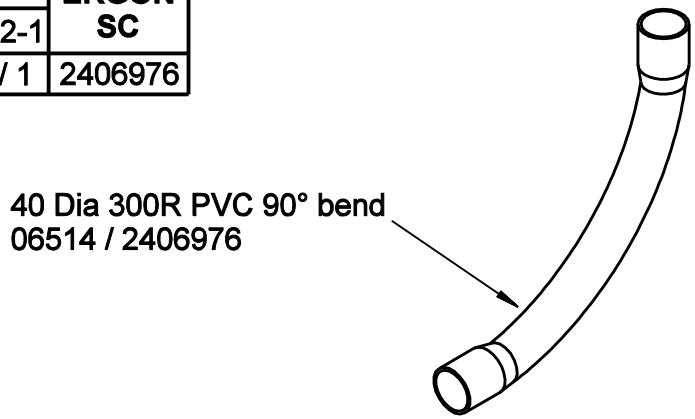

ASSEMBLY 812-1 BEND U/G SERVICE CONDUIT 40 DIA. x 90° 300R

MATERIAL

ENERGEX SC	QTY 812-10	ERGON SC
17030	1 / -	Nil

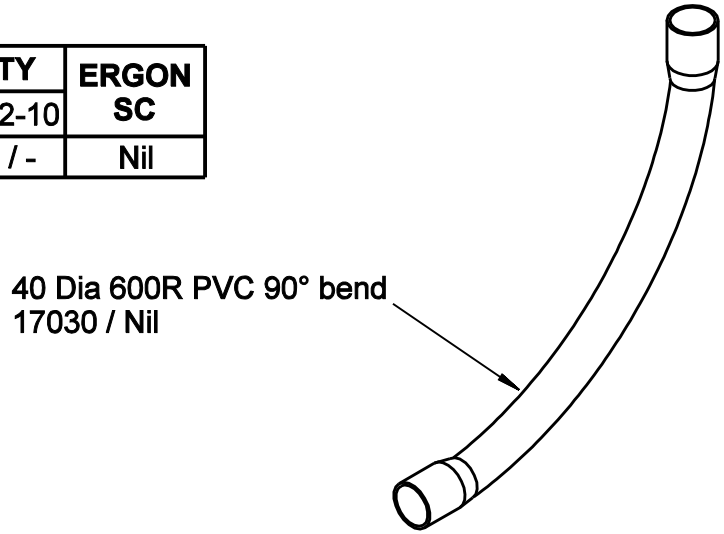

ASSEMBLY 812-10 BEND U/G SERVICE CONDUIT 40 DIA. x 90° 600R

MATERIAL

ENERGEX SC	QTY 812-5	ERGON SC
06640	1 / 1	2406677

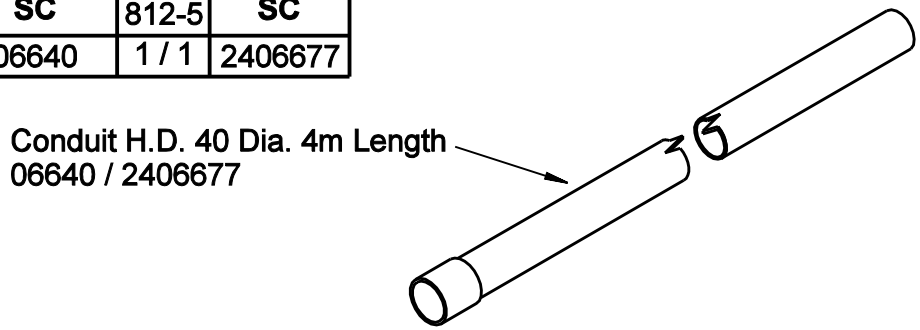

ASSEMBLY 812-5 CONDUIT H.D. 40 DIA.

MATERIAL

ENERGEX SC	QTY 812-15	ERGON SC
17121	1 / -	Nil
17122	1 / -	Nil

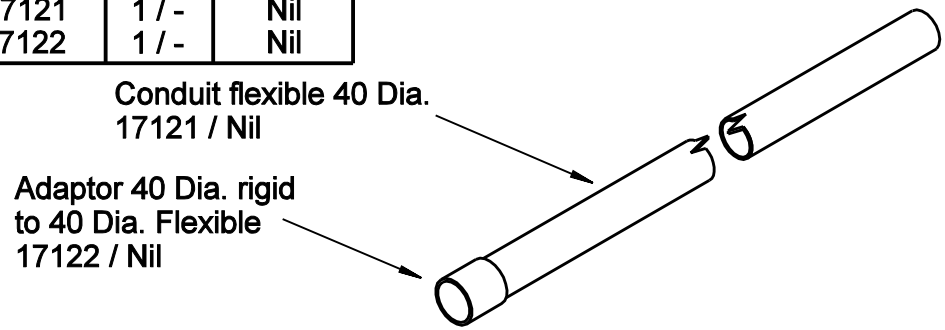

ASSEMBLY 812-15 CONDUIT FLEXIBLE 40 DIA. & ADAPTOR

A	ORIGINAL ISSUE

REFERENCE DRAWING ENERGEX: 4927-A4-10.1

REFERENCE DRAWING ERGON: 5 82 8012 1

This document must not be reproduced in part or whole without written permission from ENERGEX or Ergon Energy

energex

© COPYRIGHT 2002 ENERGEX
ENERGEX Corporation Limited
ABN 40 078 849 055

ERGON. ENERGY

© COPYRIGHT 2002 ERGON ENERGY
Ergon Energy Corporation Limited
ABN 50 087 646 062

HARD COPY UNCONTROLLED

		Date
Approved Ergon	J. Brooks	14/10/10
Approved Energex	R. English	14/10/10
Checked	D. Taylor / B. Oyegoke	14/10/10
Drawn	L. Burton / T. Borg	30/09/10

LIGHTING
ASSEMBLIES
CONDUIT BEND & CONDUIT

EE DRWG NO: 1-2-812
EGX DRWG NO: 10500-A4-1-2-812

VOLUME	FOLDER	PAGE	ISSUE
1	2	812	0A

MATERIAL

ENERGEX SC	QTY 813-2	QTY 813-4	ERGON SC
14107	1 / 1	- / -	2406974
NIL	- / -	- / 1	2406975
17121	AR	AR	2406677
17030	1 / 1	- / 1	2406976

U/G Service only
40 dia. UPVC conduit
17121 / 2406677
and
40 dia. 300R UPVC 90° bend
17030 / 2406976
Cast in footing.
Plug both ends and fix securely in place before placing concrete.

DIMENSIONS

DIM 'A':
750mm min. footpath (Ergon)
600mm min. footpath (Energex)

NOTES:

1. For use when shallow rock is encountered and BPM steel pole foundation (refer Assemblies pages 810 / 839) is not able to be excavated.
2. Concrete and reinforcement fabric not included in material. Min. concrete volume = 3.07m³
3. Prepare and place concrete in accordance with Section 17 of AS3600:2009.
4. SL92 fabric shall be in accordance with AS1304.
5. Concrete shall be grade 25MPa.
6. Minimum cover to reinforcement, 100mm.
7. Orientate hold down bolts in footing with the 2 bolts nearest road, parallel to road.
8. Locate conduit/s and bend/s to exit top of footing on pole and exit side/s of footingto suit direction of incoming conduit/s.
9. If installed in an area of overhead supply then securely plug conduit to avoid ingress of soil.

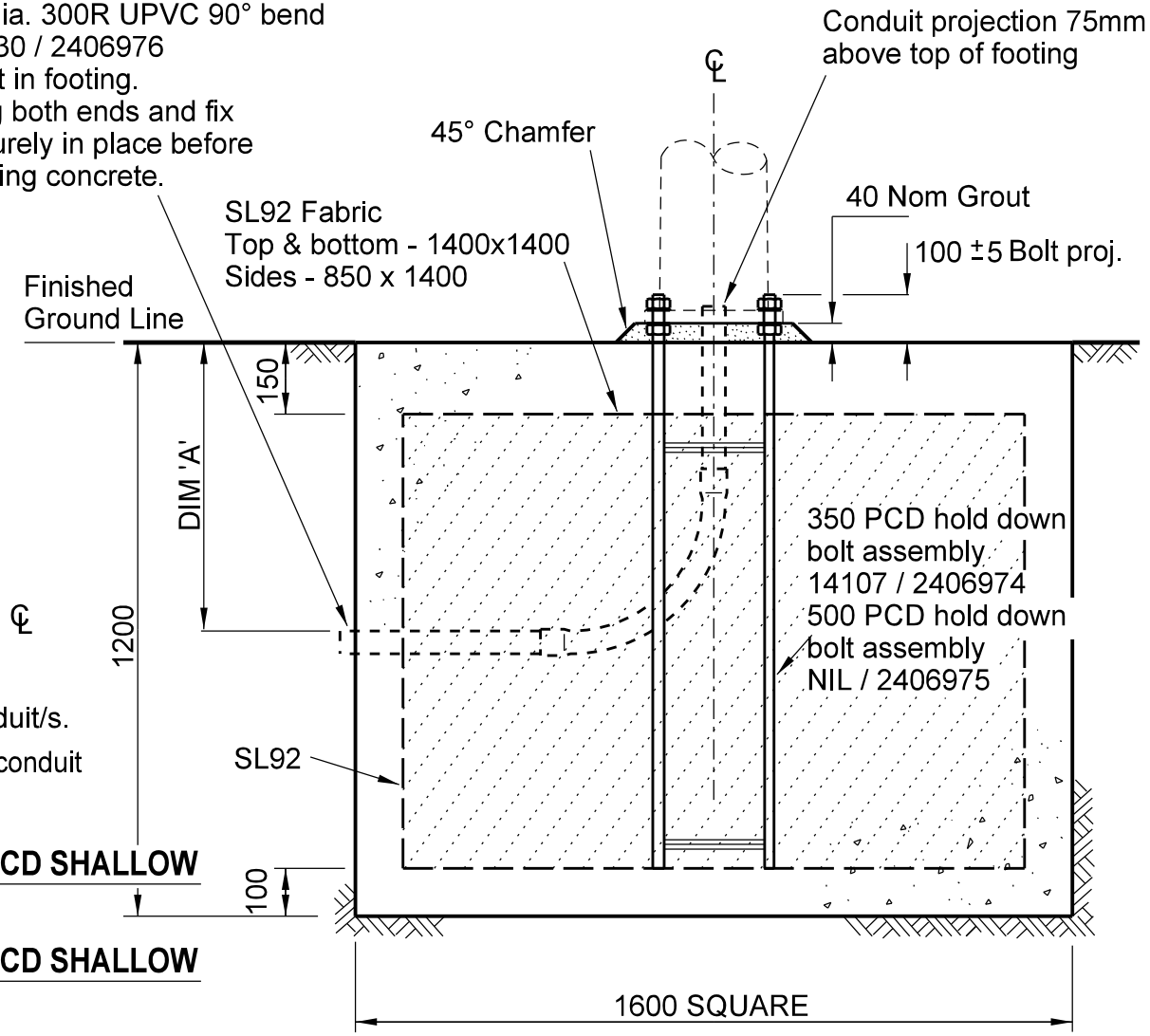

ASSEMBLY 813-2 **MAJOR ROAD FOUNDATION 350 PCD SHALLOW (SPECIAL PURPOSE ONLY)**

ASSEMBLY 813-4 **MAJOR ROAD FOUNDATION 500 PCD SHALLOW (SPECIAL PURPOSE ONLY)**

A	ORIGINAL ISSUE	
B	12.09.13	
C	21.10.14	

REFERENCE DRAWING ENERGEX: NIL

REFERENCE DRAWING ERGON: 5 82 8013 1

This document must not be reproduced in part or whole without written permission from ENERGEX or Ergon Energy

energex

© COPYRIGHT 2002 ENERGEX
ENERGEX Corporation Limited
ABN 40 078 849 055

ERGON ENERGY

© COPYRIGHT 2002 ERGON ENERGY
Ergon Energy Corporation Limited
ABN 50 087 646 062

HARD COPY UNCONTROLLED

		Date
Approved Ergon	C. Noel	01/04/16
Approved Energex	F. Zaini	01/04/16
Checked	P. Relf / A. Bletchly	01/04/16
Drawn	L. Burton / T. Borg	30/09/10

LIGHTING
ASSEMBLIES
MAJOR ROAD
BPM STEEL POLE SHALLOW FOUNDATION

EE DRWG NO: 1-2-813
EGX DRWG NO: 10500-A4-1-2-813

VOLUME	FOLDER	PAGE	ISSUE
1	2	813	0C

MATERIAL

ENERGEX SC	QTY			ERGON SC
	814-1	814-2	814-3	
15530	1 / 1			0924058
17196		1 / 1		0924065
14770			1 / 1	0924060

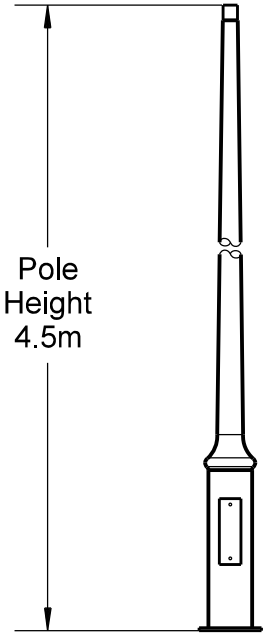

ASSEMBLY 814-1 MINOR ROAD POLE 4.5m NOSTALGIA (GREEN)

ASSEMBLY 814-2 MINOR ROAD POLE 4.5m NOSTALGIA (BLUE/GREY)

ASSEMBLY 814-3 MINOR ROAD POLE 4.5m NOSTALGIA (BLACK)

A	ORIGINAL ISSUE	
B	18.02.13	
C	22.03.18	

REFERENCE DRAWING ENERGEX: 4927-A4-2.5

REFERENCE DRAWING ERGON: 5 82 8014 1

This document must not be reproduced in part or whole without written permission from ENERGEX or Ergon Energy

energex

© COPYRIGHT 2002 ENERGEX
ENERGEX Corporation Limited
ABN 40 078 849 055

ERGON ENERGY

© COPYRIGHT 2002 ERGON ENERGY
Ergon Energy Corporation Limited
ABN 50 087 646 062

HARD COPY UNCONTROLLED

Approved Ergon	C. Noel	01/05/18
Approved Energex	F. Zaini	01/05/18
Checked	P. Relf / A. Bletchly	01/05/18
Drawn	L. Burton / T. Borg	30/09/10

LIGHTING
ASSEMBLIES
MINOR ROAD
NOSTALGIA STEEL POLES

EE DRWG NO: 1-2-814

EGX DRWG NO: 10500-A4-1-2-814

VOLUME	FOLDER	PAGE	ISSUE
1	2	814	0C

MATERIAL

ENERGEX SC	QTY 815-1	ERGON SC
05733	1 / 1	0126029

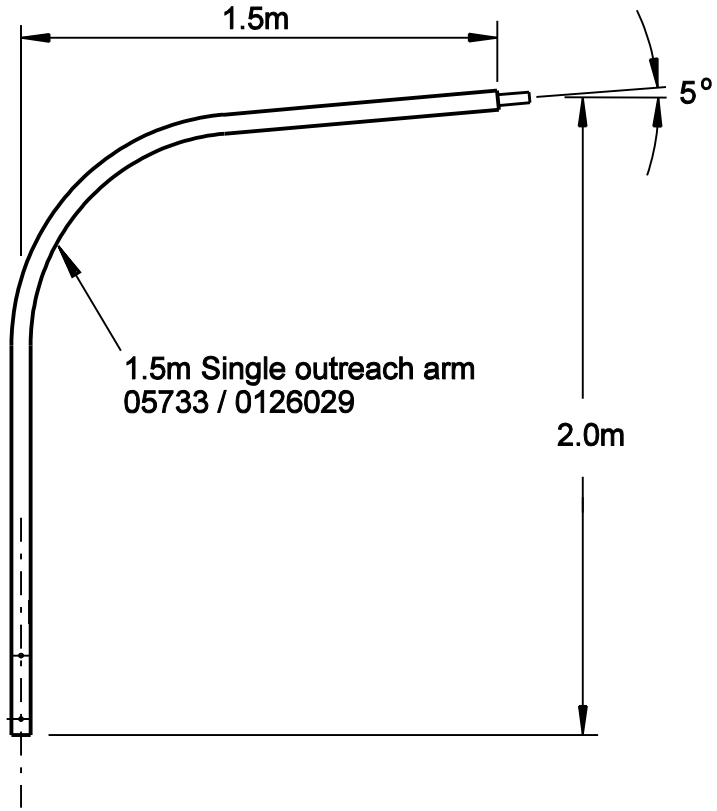

ASSEMBLY 815-1 MINOR ROAD OUTREACH ARM 1.5m SINGLE

MATERIAL

ENERGEX SC	QTY 815-2	ERGON SC
05727	1 / 1	2403725

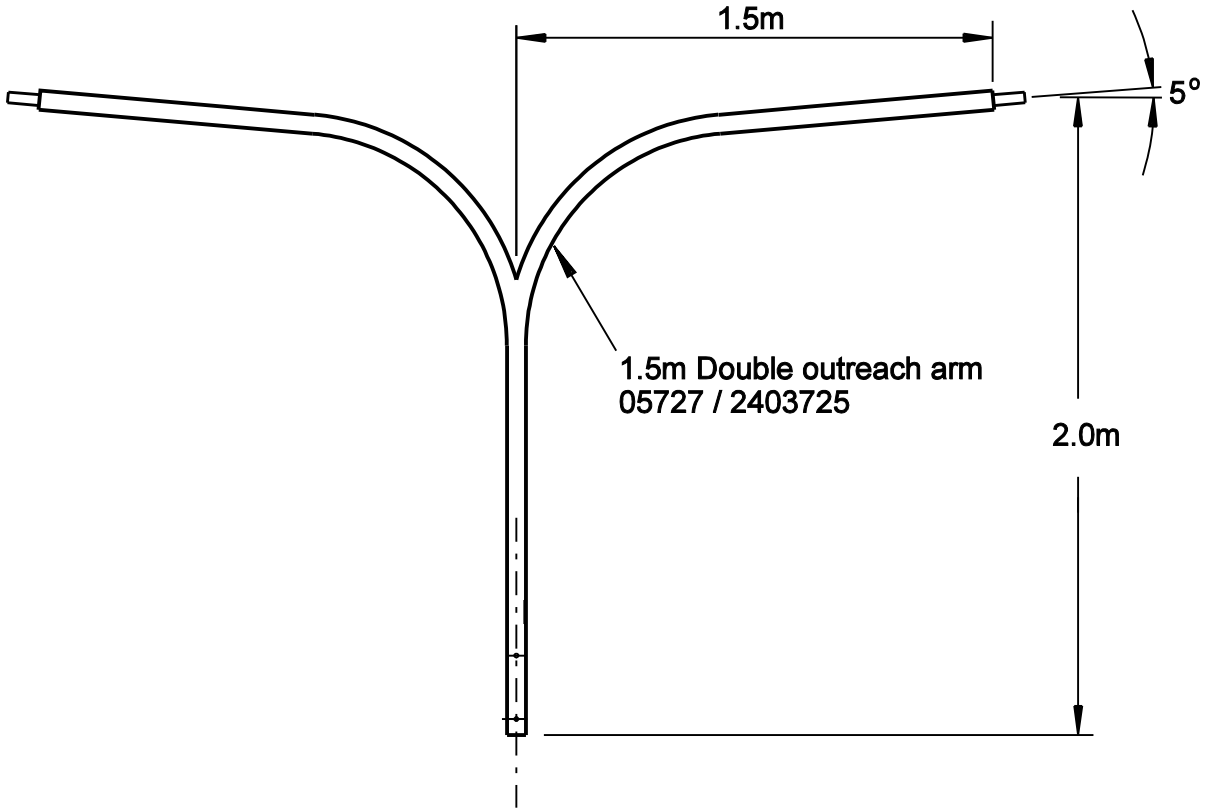

ASSEMBLY 815-2 MINOR ROAD OUTREACH ARM 1.5m DOUBLE

A	ORIGINAL ISSUE

REFERENCE DRAWING ENERGEX: 4927-A4-6.3,6.4

REFERENCE DRAWING ERGON: 5 82 8015 1

This document must not be reproduced in part or whole without written permission from ENERGEX or Ergon Energy

energex

© COPYRIGHT 2002 ENERGEX
ENERGEX Corporation Limited
ABN 40 078 849 055

ERGON. ENERGY

© COPYRIGHT 2002 ERGON ENERGY
Ergon Energy Corporation Limited
ABN 50 087 646 062

HARD COPY UNCONTROLLED

		Date
Approved Ergon	J. Brooks	14/10/10
Approved Energex	R. English	14/10/10
Checked	D. Taylor / B. Oyegoke	14/10/10
Drawn	L. Burton / T. Borg	30/09/10

LIGHTING
ASSEMBLIES
MINOR ROAD
OUTREACH ARMS

EE DRWG NO: 1-2-815
EGX DRWG NO: 10500-A4-1-2-815

VOLUME	FOLDER	PAGE	ISSUE
1	2	815	0A

MATERIAL

Assy	Description	QTY	ENERGEX SC	ERGON SC
816-3	MINOR ROAD LUMINAIRE S70 NOSTALGIA TYPE 1 GREEN	1 / 1	21550	2403273
816-9	MINOR ROAD LUMINAIRE S70 NOSTALGIA TYPE 1 BLACK	1 / -	21551	NIL
816-12	MINOR ROAD LUMINAIRE S70 NOSTALGIA TYPE 1 BLUE / GREY	1 / -	21552	NIL
816-14	MINOR ROAD LUMINAIRE CF32 NOSTALGIA TYPE 1 GREEN	1 / 1	22686	2438208
816-17	MINOR ROAD LUMINAIRE CF32 NOSTALGIA TYPE 1 BLACK	1 / 1	22687	2438216
816-20	MINOR ROAD LUMINAIRE CF32 NOSTALGIA TYPE 1 BLUE / GREY	1 / -	22788	NIL
816-21	MINOR ROAD LUMINAIRE L17 NOSTALGIA TYPE 1 GREEN	1 / 1	2457687	2457687
816-22	MINOR ROAD LUMINAIRE L25 NOSTALGIA TYPE 1 GREEN	1 / 1	2457695	2457695
816-23	MINOR ROAD LUMINAIRE L30 NOSTALGIA TYPE 1 GREEN	1 / 1	2457703	2457703
816-24	MINOR ROAD LUMINAIRE L17 NOSTALGIA TYPE 1 BLACK	1 / 1	2457711	2457711
816-25	MINOR ROAD LUMINAIRE L25 NOSTALGIA TYPE 1 BLACK	1 / 1	2457729	2457729
816-26	MINOR ROAD LUMINAIRE L17 NOSTALGIA TYPE 1 BLUE / GREY	1 / 1	2456457	2456457
816-27	MINOR ROAD LUMINAIRE L25 NOSTALGIA TYPE 1 BLUE / GREY	1 / 1	2457653	2457653
816-28	MINOR ROAD LUMINAIRE L30 NOSTALGIA TYPE 1 BLACK	1 / -	2457661	2457661
816-29	MINOR ROAD LUMINAIRE L30 NOSTALGIA TYPE 1 BLUE/GREY	1 / -	2456465	2456465

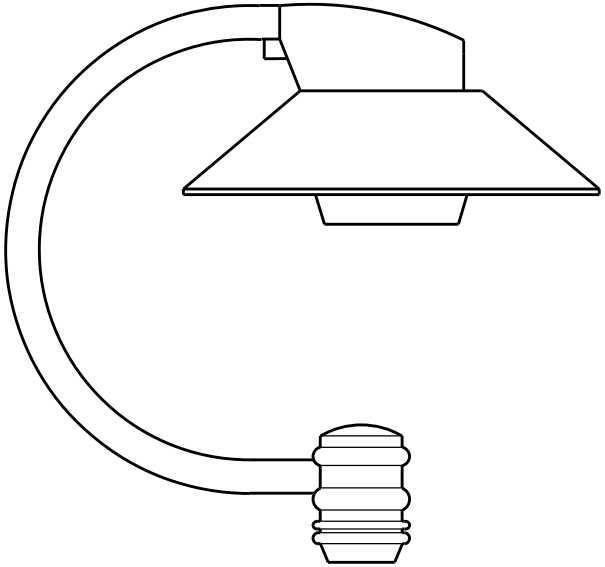

Notes

1. Luminaires are supplied complete with lamp and PE cell fitted.
2. PE Cell assembly 901-1 and lamp assembly 902-1, 14 are provided for maintenance spares.
3. LED luminaire, assembly 816-21 - 25, use NEMA, High Rating PE cells (Assy 901-2).

A	ORIGINAL ISSUE	REFERENCE DRAWING ENERGEX 4927-A4-6.8,6.9	energex	Approved Ergon A. Bletchly	Date 09/08/19
D	05.01.16			Approved Energex A. Bletchly	Date 09/08/19
E	21.12.16	REFERENCE DRAWING ERGON 5 82 8016 1	© COPYRIGHT 2019 ENERGEX ENERGEX Corporation Limited ABN 40 078 849 055	Checked K. Slater	Date 09/08/19
F	22.03.18	This document must not be reproduced in part or whole without written permission from ENERGEX or Ergon Energy	© COPYRIGHT 2019 ERGON ENERGY Ergon Energy Corporation Limited ABN 50 087 646 062		
G	26.06.19		HARD COPY UNCONTROLLED	Drawn L. Burton / T. Borg	Date 30/09/10

LIGHTING
ASSEMBLIES
MINOR ROAD NOSTALGIA TYPE 1 LUMINAIRE
(GREEN, BLACK & BLUE / GREY)

EE DRWG NO: 1-2-816	VOLUME	FOLDER	PAGE	ISSUE
EGX DRWG NO: 10500-A4-1-2-816	1	2	816	0G

MATERIAL

Assy	Description	QTY	ENERGEX SC	ERGON SC
817-3	Minor Road Luminaire S70 Normal	1 / 1	21540	2403257
817-7	Minor Road Luminaire S70 Aeroscreen	1 / 1	21543	2405828
817-9	Minor Road Luminaire CF32 Normal	1 / 1	21224	2438174
817-12	Minor Road Luminaire H70 Normal	1 / 1	22765	2438257
817-13	Minor Road Luminaire CF32 Aeroscreen	1 / 1	22685	2438182
817-15	Minor Road Luminaire H70 Aeroscreen	1 / 1	22766	2438265

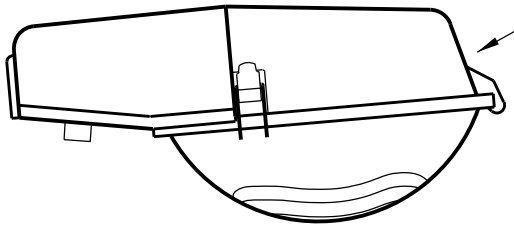

Luminaire

S70 Normal
21540 / 2403257
CF32 Normal
21224 / 2438174
H70 Normal
22765 / 2438257

S70 Aeroscreen
21543 / 2405828
CF32 Aeroscreen
22685 / 2438182
H70 Aeroscreen
22766 / 2438265

Notes

1. Luminaires are supplied complete with lamp and PE cell fitted.
2. PE Cell assembly 901-1 and lamp assembly 902-1, 8, 9, 14 are provided for maintenance spares.

MATERIAL

Assy	Description	QTY	ENERGEX SC	ERGON SC
817-22	Minor Road Luminaire L17 Normal	1 / 1	2469690	2469690
817-23	Minor Road Lum. L17 3K Normal	1 / 1	2471621	2471621
817-33	Minor Road Luminaire L17 Aeroscreen	1 / 1	2469708	2469708
817-34	Minor Road Lum. L17 3K Aeroscreen	1 / 1	2471639	2471639
817-36	Minor Road Luminaire L24 Aeroscreen	1 / 1	2469724	2469724
817-37	Minor Road Luminaire L33 Aeroscreen	1 / 1	2469716	2469716
817-38	Minor Road Lum. L33 3K Aeroscreen	1 / 1	2471647	2471647

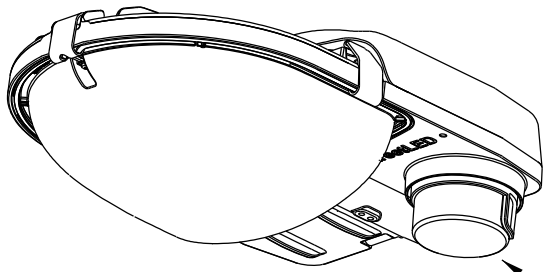

Luminaire

L17 Normal
2469690 / 2469690
L17 3K Normal
2471621 / 2471621
L17 Aeroscreen
2469708 / 2469708
L17 3K Aeroscreen
2471639 / 2471639
L24 Aeroscreen
2469724 / 2469724
L33 Aeroscreen
2469716 / 2469716
L33 3K Aeroscreen
2471647 / 2471647

Notes

1. Luminaires are supplied with PE cell.
2. Assemblies 22, 23, 33, 34 & 36 are supplied with an adaptor to reduce upcast angle to 0°.

A	ORIGINAL ISSUE	
E	21.12.16	
F	22.03.18	
G	28.11.18	
H	26.06.19	

REFERENCE DRAWING ENERGEX
4927-A4-6.3,6.4

REFERENCE DRAWING ERGON
5 82 8017 1

This document must not be reproduced in part or whole without written permission from ENERGEX or Ergon Energy

energex

© COPYRIGHT 2019 ENERGEX
ENERGEX Corporation Limited
ABN 40 078 849 055

ERGON ENERGY

© COPYRIGHT 2019 ERGON ENERGY
Ergon Energy Corporation Limited
ABN 50 087 646 062

HARD COPY UNCONTROLLED

Approved Ergon	A. Bletchly	09/08/19
Approved Energex	A. Bletchly	09/08/19
Checked	K. Slater	09/08/19
Drawn	L. Burton / T. Borg	30/09/10

LIGHTING

ASSEMBLIES
MINOR ROAD
LUMINAIRE NORMAL / AEROSCREEN

EE DRWG NO: 1-2-817
EGX DRWG NO: 10500-A4-1-2-817

VOLUME	FOLDER	PAGE	ISSUE
1	2	817	0H

MATERIAL

ENERGEX SC	QTY			ERGON SC
	818-1	818-2	818-3	
Nil	AR	AR	AR	0184880
05487	1 / 1	1 / 1	1 / 1	1103813
07112	6m	9m	18m	2403244
Nil	- / 1	- / 1	- / 1	2427359

NOTES:

1. To provide a permanent earth attachment to pole assemble lug, 1 flat washer, 1 spring washer, 1 nut and 1 flat washer under terminal panel.
2. Provide approximately 100mm of excess service cable. Loop in pole.
3. Terminal blocks provided as part of terminal panel suitable for max. 6mm² cable.

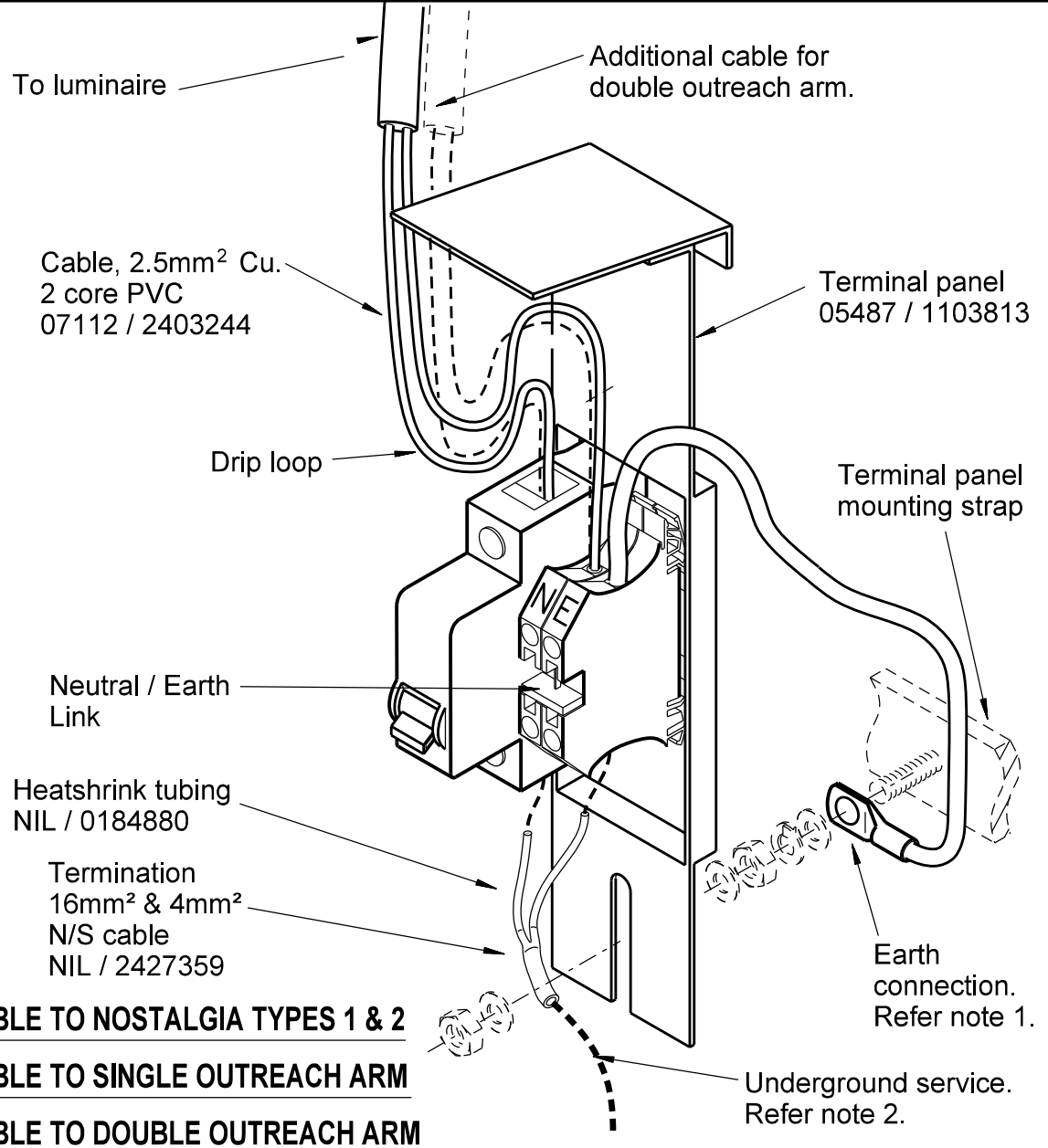

ASSEMBLY 818-1 MINOR ROAD TERMINAL PANEL AND CABLE TO NOSTALGIA TYPES 1 & 2

ASSEMBLY 818-2 MINOR ROAD TERMINAL PANEL AND CABLE TO SINGLE OUTREACH ARM

ASSEMBLY 818-3 MINOR ROAD TERMINAL PANEL AND CABLE TO DOUBLE OUTREACH ARM

A	ORIGINAL ISSUE	REFERENCE DRAWING ENERGEX 4927-A4-2.5	energex	ERGON ENERGY	Approved Ergon C. Noel 01/04/16	**LIGHTING** ASSEMBLIES MINOR ROAD SINGLE TERMINAL PANELS
B	10.11.14	REFERENCE DRAWING ERGON 5 82 8018 1	© COPYRIGHT 2002 ENERGEX ENERGEX Corporation Limited ABN 40 078 849 055	© COPYRIGHT 2002 ERGON ENERGY Ergon Energy Corporation Limited ABN 50 087 646 062	Approved Energex F. Zaini 01/04/16	
		This document must not be reproduced in part or whole without written permission from ENERGEX or Ergon Energy	HARD COPY UNCONTROLLED		Checked P. Relf / A. Bletchly 01/04/16	
					Drawn L. Burton / T. Borg 30/09/10	

EE DRWG NO: 1-2-818	VOLUME	FOLDER	PAGE	ISSUE
EGX DRWG NO: 10500-A4-1-2-818	1	2	818	0B

MATERIAL

ENERGEX SC	QTY 821-1	ERGON SC
22405	1 / 1	1140638
00684	6 / 6	1757894
17119	AR	1420068

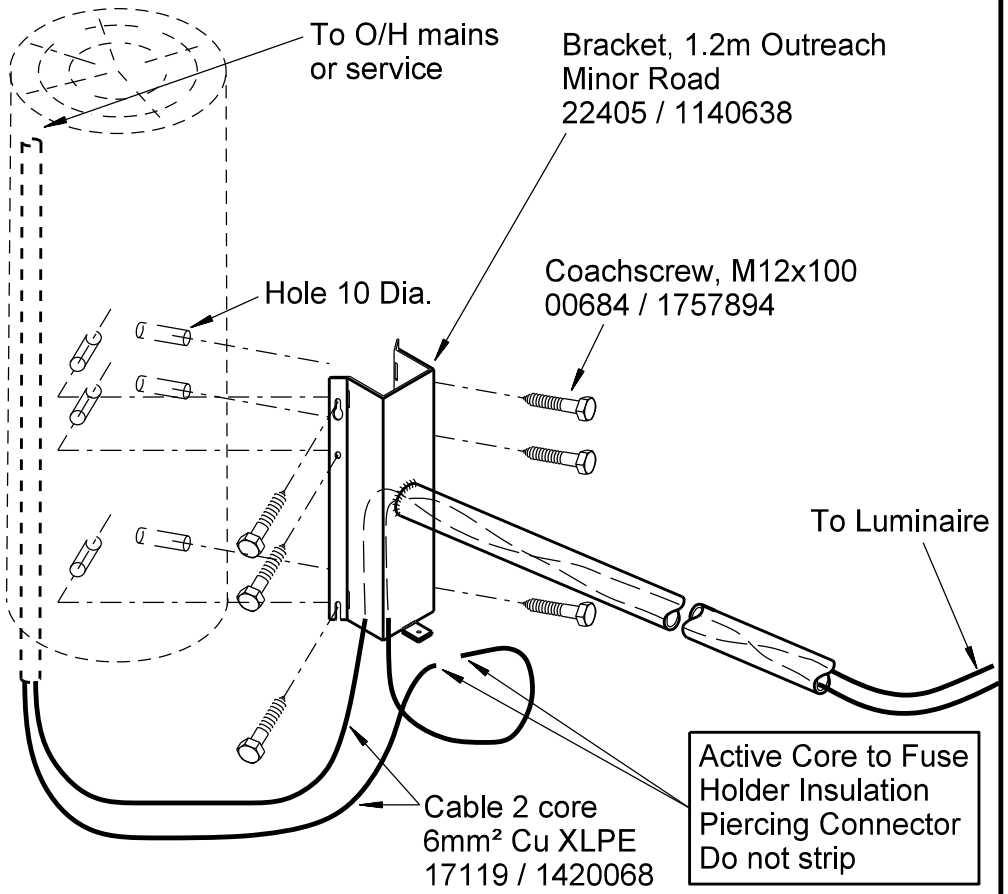

ASSEMBLY 821-1 MINOR ROAD BRACKET MI1 & CABLE MOUNTING TO WOOD POLE

MATERIAL

ENERGEX SC	QTY 821-2	ERGON SC
22406	1 / 1	0104692
00684	6 / 6	1757894
17119	AR	1420068

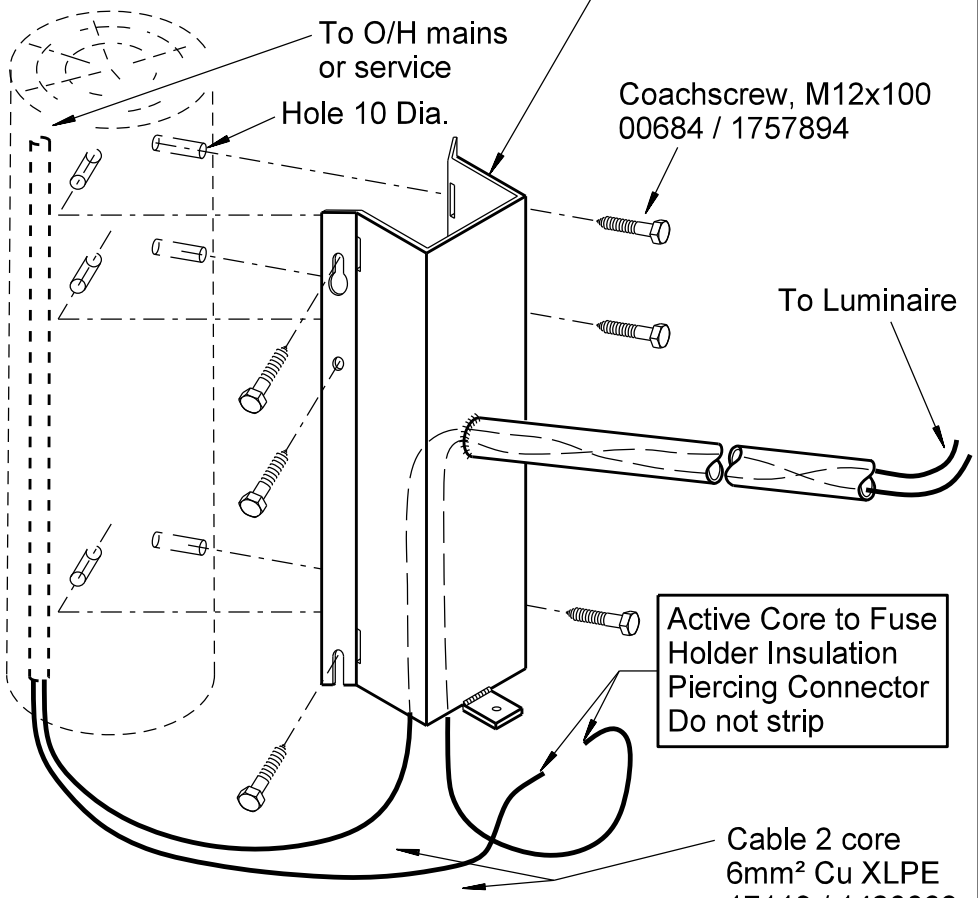

ASSEMBLY 821-2 MINOR ROAD BRACKET MI2 & CABLE MOUNTING TO WOOD POLE

A	ORIGINAL ISSUE	REFERENCE DRAWING ENERGEX 4927-A4-3.2,4.5	energex	ERGON ENERGY	Approved Ergon A. Bletchly 01/03/19	**LIGHTING** ASSEMBLIES MINOR ROAD STREETLIGHT BRACKETS MI1 & MI2 MOUNTING TO WOOD POLE
B	09.10.18	REFERENCE DRAWING ERGON 5 82 8021 1	© COPYRIGHT 2019 ENERGEX ENERGEX Corporation Limited ABN 40 078 849 055	© COPYRIGHT 2019 ERGON ENERGY Ergon Energy Corporation Limited ABN 50 087 646 062	Approved Energex A. Bletchly 01/03/19	
		This document must not be reproduced in part or whole without written permission from ENERGEX or Ergon Energy	HARD COPY UNCONTROLLED		Checked K. Slater 01/03/19	
					Drawn L. Burton / T. Borg 30/09/10	

EE DRWG NO: 1-2-821	VOLUME	FOLDER	PAGE	ISSUE
EGX DRWG NO: 10500-A4-1-2-821	1	2	821	0B

MATERIAL

ENERGEX SC	QTY 822-1	ERGON SC
22390	1 / 1	0104186
00684	4 / 4	1757894
17119	AR	1420068

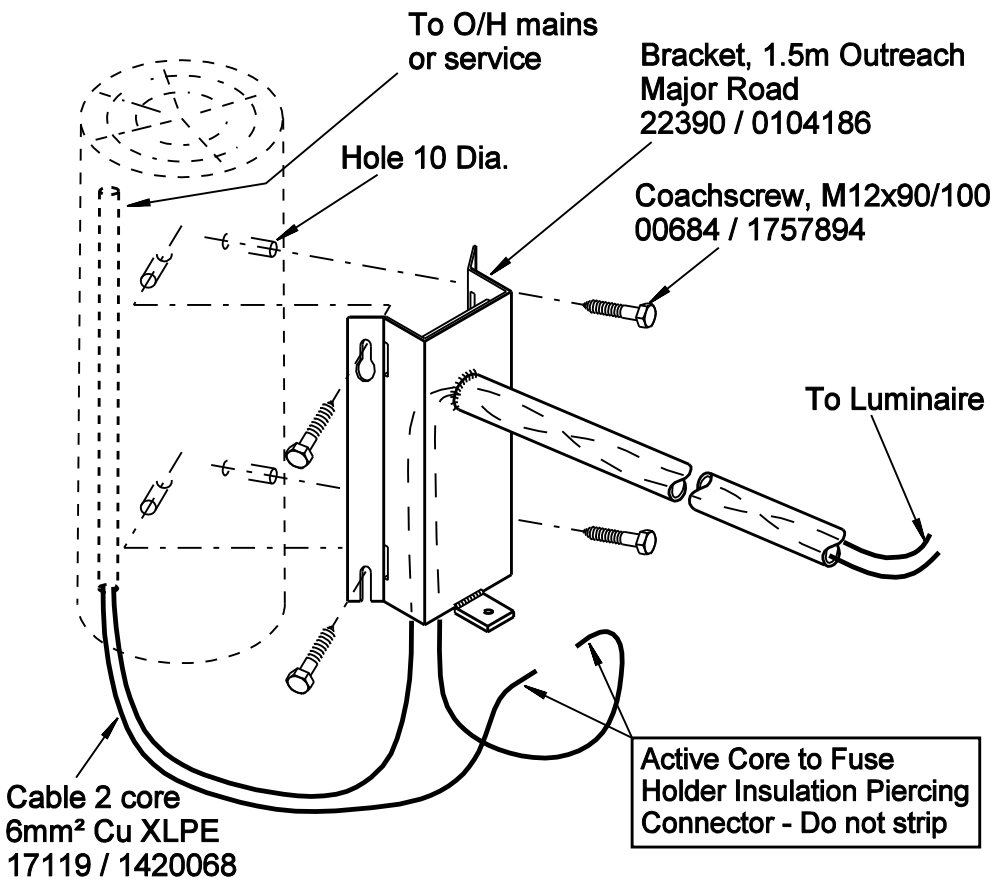

ASSEMBLY 822-1 MAJOR ROAD BRACKET MA1 & CABLE MOUNTING TO WOOD POLE

MATERIAL

ENERGEX SC	QTY 822-2	ERGON SC
22402	1 / 1	0104187
00684	6 / 6	1757894
17119	AR	1420068

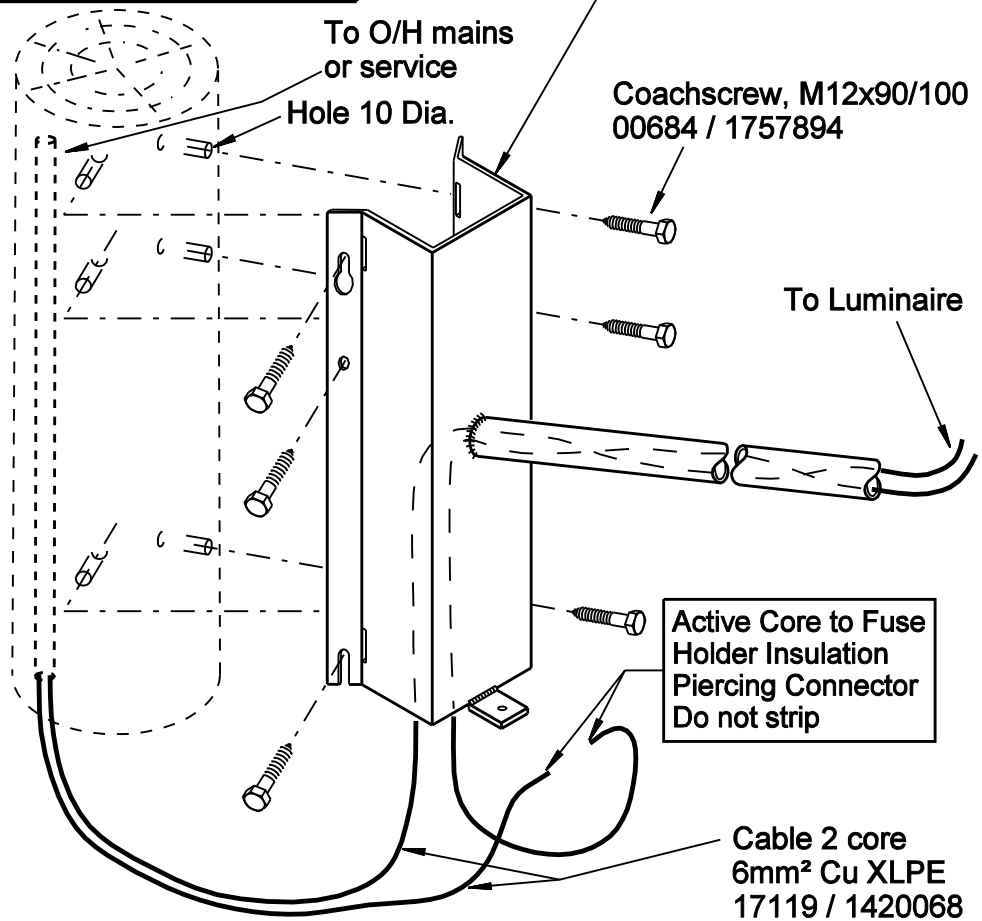

ASSEMBLY 822-2 MAJOR ROAD BRACKET MA2 & CABLE MOUNTING TO WOOD POLE

A	ORIGINAL ISSUE

REFERENCE DRAWING ENERGEX: 4927-A4-3.1,3.2,4.5

REFERENCE DRAWING ERGON: 5 82 8022 1

This document must not be reproduced in part or whole without written permission from ENERGEX or Ergon Energy

energex

© COPYRIGHT 2002 ENERGEX
ENERGEX Corporation Limited
ABN 40 078 849 055

ERGON. ENERGY

© COPYRIGHT 2002 ERGON ENERGY
Ergon Energy Corporation Limited
ABN 50 087 646 062

HARD COPY UNCONTROLLED

		Date
Approved Ergon	J. Brooks	14/10/10
Approved Energex	R. English	14/10/10
Checked	D. Taylor / B. Oyegoke	14/10/10
Drawn	L. Burton / T. Borg	30/09/10

LIGHTING

ASSEMBLIES
MAJOR ROAD STREETLIGHT BRACKETS
MA1 & MA2 MOUNTING TO POLE

EE DRWG NO: 1-2-822
EGX DRWG NO: 10500-A4-1-2-822

VOLUME	FOLDER	PAGE	ISSUE
1	2	822	0A

MATERIAL

ENERGEX SC	QTY 823-1	QTY 823-2	ERGON SC
22403	1 / 1		0104188
22404		1 / 1	0104190
00684	6 / 6	6 / 6	1757894
17119	AR	AR	1420068

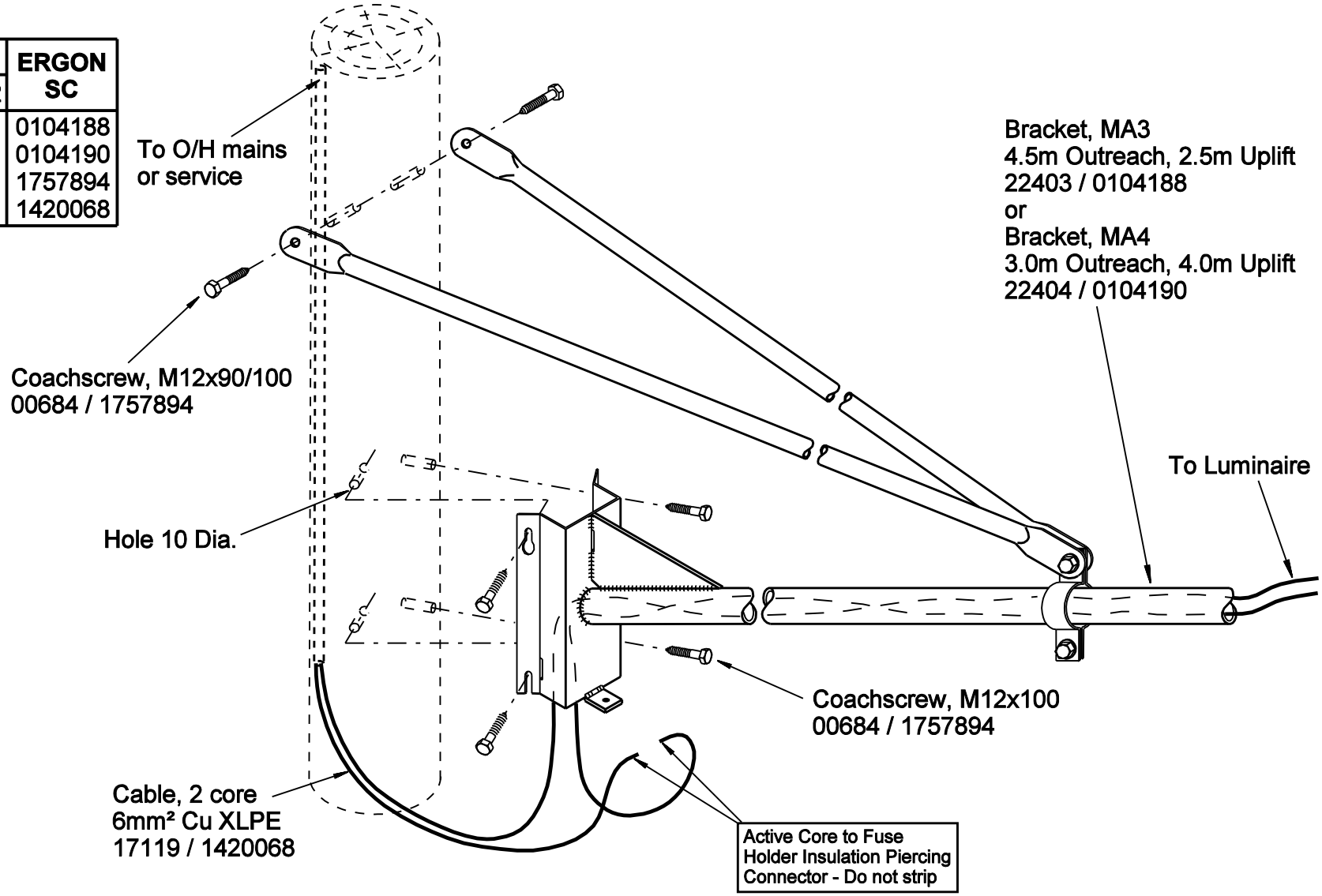

ASSEMBLY 823-1 MAJOR ROAD BRACKET MA3 & CABLE, MOUNTING TO WOOD POLE

ASSEMBLY 823-2 MAJOR ROAD BRACKET MA4 & CABLE, MOUNTING TO WOOD POLE

A	ORIGINAL ISSUE	REFERENCE DRAWING ENERGEX: 4927-A4-4.2,4.3	Approved Ergon: J. Brooks	Date: 14/10/10	**LIGHTING** ASSEMBLIES MAJOR ROAD STREETLIGHT BRACKETS MA3 & MA4 MOUNTING TO POLE
		REFERENCE DRAWING ERGON: 5 82 8023 1	Approved Energex: R. English	Date: 14/10/10	
			Checked: D. Taylor / B. Oyegoke	Date: 14/10/10	
			Drawn: L. Burton / T. Borg	Date: 30/09/10	

This document must not be reproduced in part or whole without written permission from ENERGEX or Ergon Energy

energex © COPYRIGHT 2002 ENERGEX ENERGEX Corporation Limited ABN 40 078 849 055

ERGON. ENERGY © COPYRIGHT 2002 ERGON ENERGY Ergon Energy Corporation Limited ABN 50 087 646 062

HARD COPY UNCONTROLLED

EE DRWG NO: 1-2-823	VOLUME	FOLDER	PAGE	ISSUE
EGX DRWG NO: 10500-A4-1-2-823	1	2	823	0A

MATERIAL

ENERGEX SC	QTY 824-1	ERGON SC
22401	1 / 1	2406323
17119	AR	1420068
08521	2 / 2	1780594
10447	2 / 2	1778107
01046	2 / 2	1777577
B&N M20	2 / 2	B&N M20

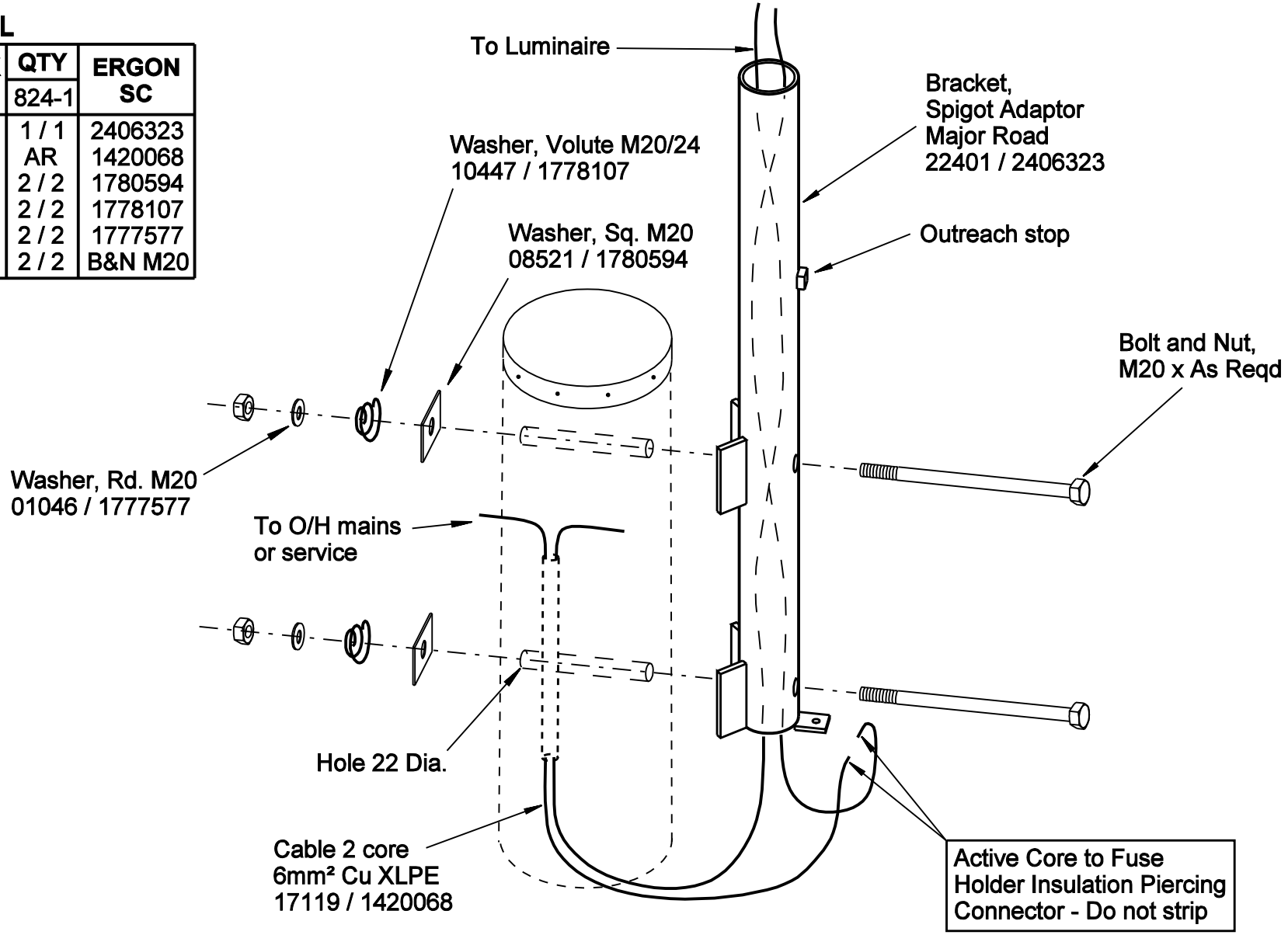

ASSEMBLY 824-1 MAJOR ROAD SPIGOT ADAPTOR BRACKET & CABLE MOUNTING TO WOOD POLE

A	ORIGINAL ISSUE	REFERENCE DRAWING ENERGEX: 4927-A4-4.1,4.2		Approved Ergon: J. Brooks	Date: 14/10/10
		REFERENCE DRAWING ERGON: 5 82 8024 1		Approved Energex: R. English	Date: 14/10/10
		This document must not be reproduced in part or whole without written permission from ENERGEX or Ergon Energy		Checked: D. Taylor / B. Oyegoke	Date: 14/10/10
			HARD COPY UNCONTROLLED	Drawn: L. Burton / T. Borg	Date: 30/09/10

energex
© COPYRIGHT 2002 ENERGEX
ENERGEX Corporation Limited
ABN 40 078 849 055

ERGON. ENERGY
© COPYRIGHT 2002 ERGON ENERGY
Ergon Energy Corporation Limited
ABN 50 087 646 062

LIGHTING
ASSEMBLIES
MAJOR ROAD SPIGOT ADAPTOR
BRACKET MOUNTING TO POLE

EE DRWG NO: 1-2-824
EGX DRWG NO: 10500-A4-1-2-824

VOLUME	FOLDER	PAGE	ISSUE
1	2	824	0A

MATERIAL

ENERGEX SC	QTY 825-1	QTY 825-2	ERGON SC
Nil	- / 1		0104681
Nil		- / 1	0104680

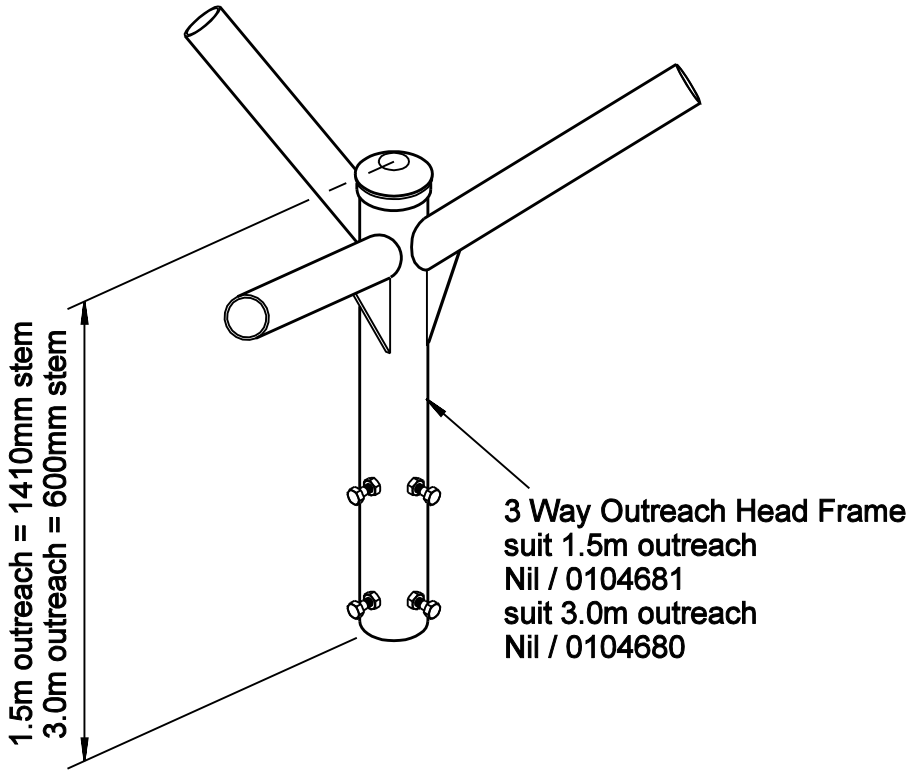

ASSEMBLY 825-1 MAJOR ROAD SPIDER 3 WAY HEAD FRAME SUIT 1.5m OUTREACH

ASSEMBLY 825-2 MAJOR ROAD SPIDER 3 WAY HEAD FRAME SUIT 3.0m OUTREACH

MATERIAL

ENERGEX SC	QTY 825-3	QTY 825-4	ERGON SC
Nil	- / 1		0104679
Nil		- / 1	0104678

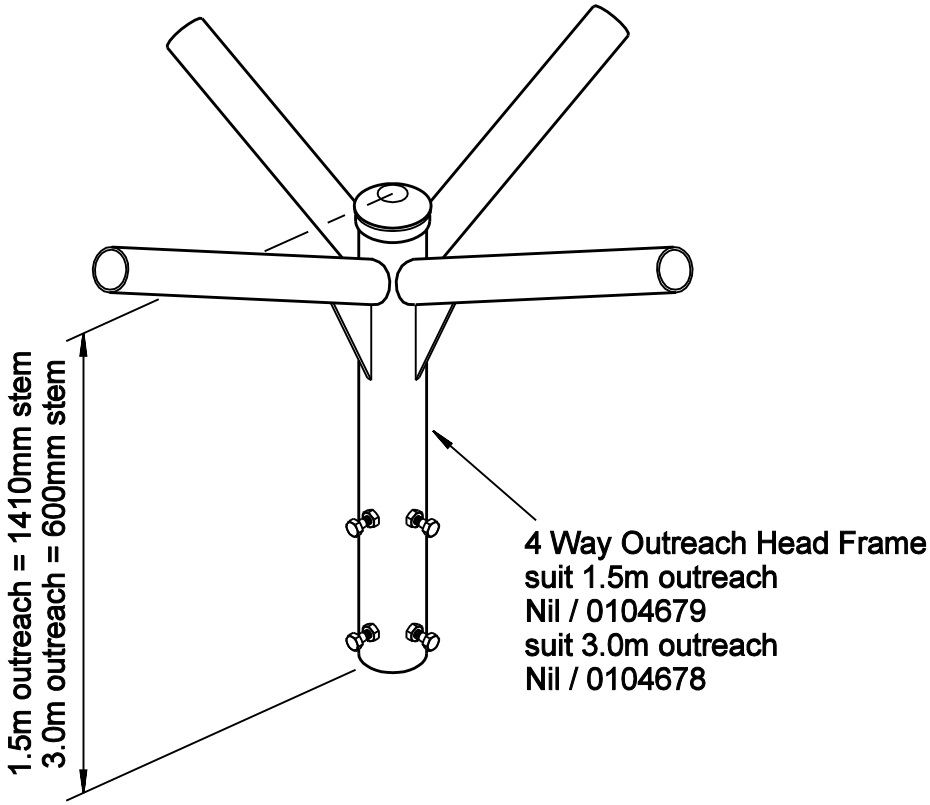

ASSEMBLY 825-3 MAJOR ROAD SPIDER 4 WAY HEAD FRAME SUIT 1.5m OUTREACH

ASSEMBLY 825-4 MAJOR ROAD SPIDER 4 WAY HEAD FRAME SUIT 3.0m OUTREACH

A	ORIGINAL ISSUE	REFERENCE DRAWING ENERGEX: NIL	
		REFERENCE DRAWING ERGON: 5 82 8056 1	

This document must not be reproduced in part or whole without written permission from ENERGEX or Ergon Energy

energex

© COPYRIGHT 2002 ENERGEX
ENERGEX Corporation Limited
ABN 40 078 849 055

ERGON. ENERGY

© COPYRIGHT 2002 ERGON ENERGY
Ergon Energy Corporation Limited
ABN 50 087 646 062

HARD COPY UNCONTROLLED

		Date
Approved Ergon	J. Brooks	14/10/10
Approved Energex	R. English	14/10/10
Checked	D. Taylor / B. Oyegoke	14/10/10
Drawn	L. Burton / T. Borg	01/10/10

LIGHITNG

ASSEMBLIES - ERGON ENERGY ONLY
3 WAY & 4 WAY HEAD FRAME
SUIT 1.5m & 3.0m OUTREACH

EE DRWG NO: 1-2-825
EGX DRWG NO: 10500-A4-1-2-825

VOLUME	FOLDER	PAGE	ISSUE
1	2	825	0A

MATERIAL

ENERGEX SC	QTY 826-1	QTY 826-2	ERGON SC
Nil	- / 1		0104677
Nil		- / 1	0104676

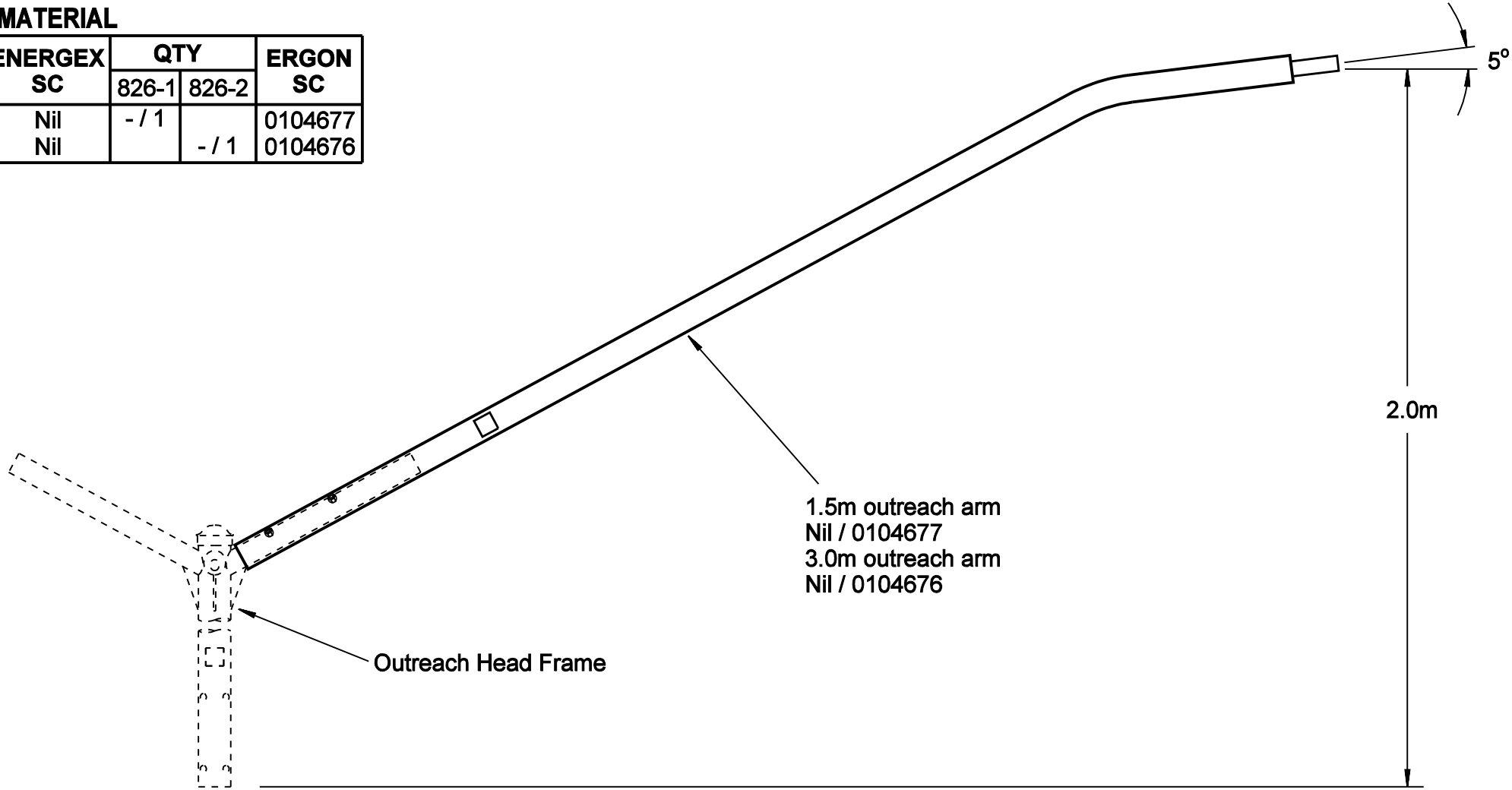

ASSEMBLY 826-1 MAJOR ROAD SPIDER OUTREACH ARM 1.5m

ASSEMBLY 826-2 MAJOR ROAD SPIDER OUTREACH ARM 3.0m

A	ORIGINAL ISSUE	REFERENCE DRAWING ENERGEX: NIL	energex	ERGON. ENERGY	Approved Ergon: J. Brooks 14/10/10
		REFERENCE DRAWING ERGON: 5 82 8057 1	© COPYRIGHT 2002 ENERGEX ENERGEX Corporation Limited ABN 40 078 849 055	©COPYRIGHT 2002 ERGON ENERGY Ergon Energy Corporation Limited ABN 50 087 646 062	Approved Energex: R. English 14/10/10
		This document must not be reproduced in part or whole without written permission from ENERGEX or Ergon Energy	HARD COPY UNCONTROLLED		Checked: D. Taylor / B. Oyegoke 14/10/10
					Drawn: L. Burton / T. Borg 01/10/10

LIGHTING
ASSEMBLIES - ERGON ENERGY ONLY
MAJOR ROAD
OUTREACH ARMS FOR 3 & 4 WAY FRAME

EE DRWG NO: 1-2-826
EGX DRWG NO: 10500-A4-1-2-826

VOLUME	FOLDER	PAGE	ISSUE
1	2	826	0A

MATERIAL

ENERGEX SC	QTY 826-1	ERGON SC
Nil	AR	0184880
10412	- / 1	1103815
07133	150mm	1542773
15885	2 / 2	2402333
07112	AR	2403244
Nil	- / 1	2427359

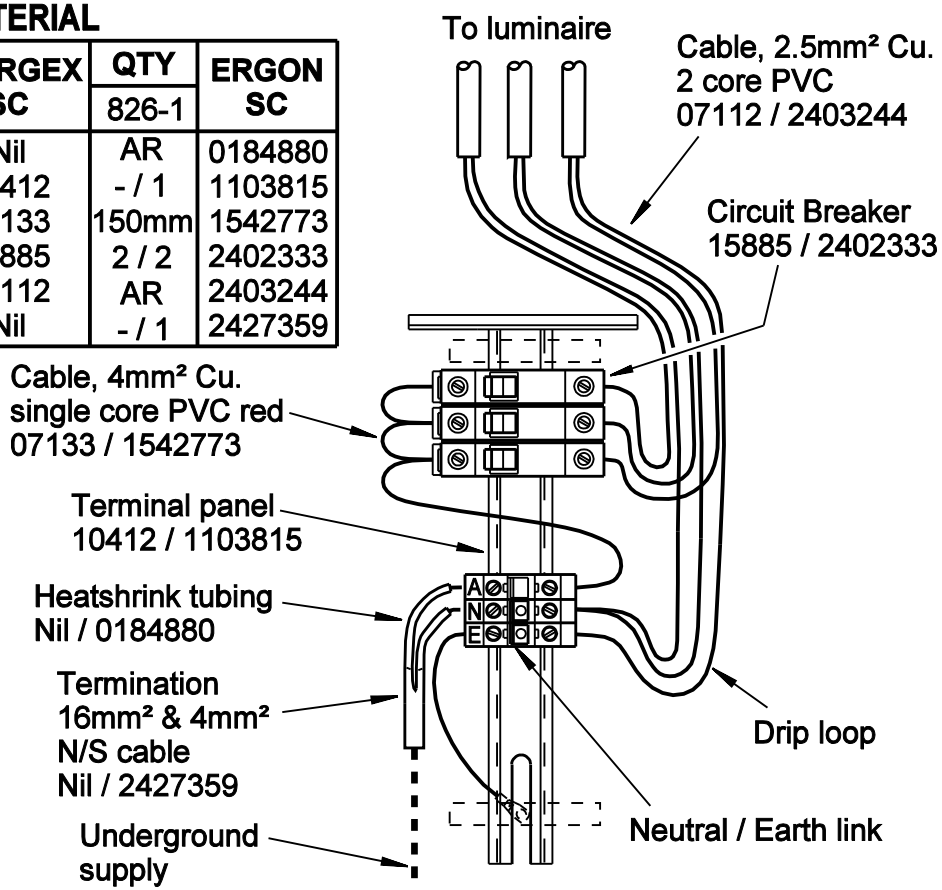

NOTES:

1. To provide a permanent earth attachment to pole, assemble lug, 1 flat washer, 1 spring washer, 1 nut and 1 flat washer under terminal panel.

ASSEMBLY 827-1 TERMINAL PANEL AND CABLE

TO MAJOR ROAD SPIDER 3 WAY OUTREACH ARM

MATERIAL

ENERGEX SC	QTY 826-1	ERGON SC
Nil	AR	0184880
10412	1 / 1	1103815
07133	225mm	1542773
15885	3 / 3	2402333
07112	AR	2403244
Nil	- / 1	2427359

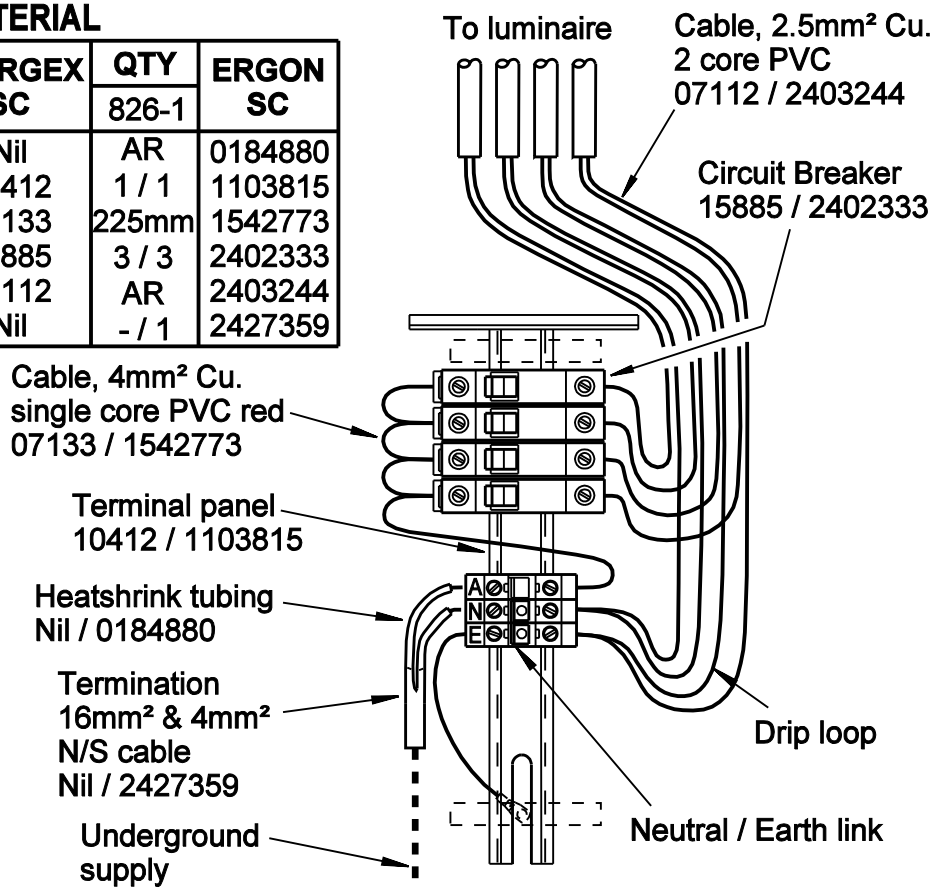

NOTES:

1. To provide a permanent earth attachment to pole, assemble lug, 1 flat washer, 1 spring washer, 1 nut and 1 flat washer under terminal panel.

ASSEMBLY 827-2 TERMINAL PANEL AND CABLE

TO MAJOR ROAD SPIDER 4 WAY OUTREACH ARM

A	ORIGINAL ISSUE

REFERENCE DRAWING ENERGEX: NIL

REFERENCE DRAWING ERGON: 5 82 8060 1

This document must not be reproduced in part or whole without written permission from ENERGEX or Ergon Energy

energex

© COPYRIGHT 2002 ENERGEX
ENERGEX Corporation Limited
ABN 40 078 849 055

ERGON. ENERGY

© COPYRIGHT 2002 ERGON ENERGY
Ergon Energy Corporation Limited
ABN 50 087 646 062

HARD COPY UNCONTROLLED

		Date
Approved Ergon	J. Brooks	14/10/10
Approved Energex	R. English	14/10/10
Checked	D. Taylor / B. Oyegoke	14/10/10
Drawn	L. Burton / T. Borg	01/10/10

LIGHTING
ASSEMBLIES
MAJOR ROAD
TERMINAL PANELS - 3 WAY & 4 WAY

EE DRWG NO: 1-2-827
EGX DRWG NO: 10500-A4-1-2-827

VOLUME	FOLDER	PAGE	ISSUE
1	2	827	0A

MATERIAL

ENERGEX SC	QTY				ERGON SC
	828-1	828-2	828-3	828-4	
13215	1 / 1				2403016
13216		1 / 1			0924076
13217			1 / 1		2403010
13218				1 / 1	2403011
13795	1 / 1	1 / 1	1 / 1		0924070
16826				1 / 1	2402972

Care should be exercised when painting or powder coating poles to ensure that the underside of the base plate is free of paint or powder coating (ie. remains as plain galvanised steel) for at least 20mm either side of each bolt attachment slot. This requirement is essential to ensure that the pole earth continuity is maintained through the rag bolt foundation assembly.

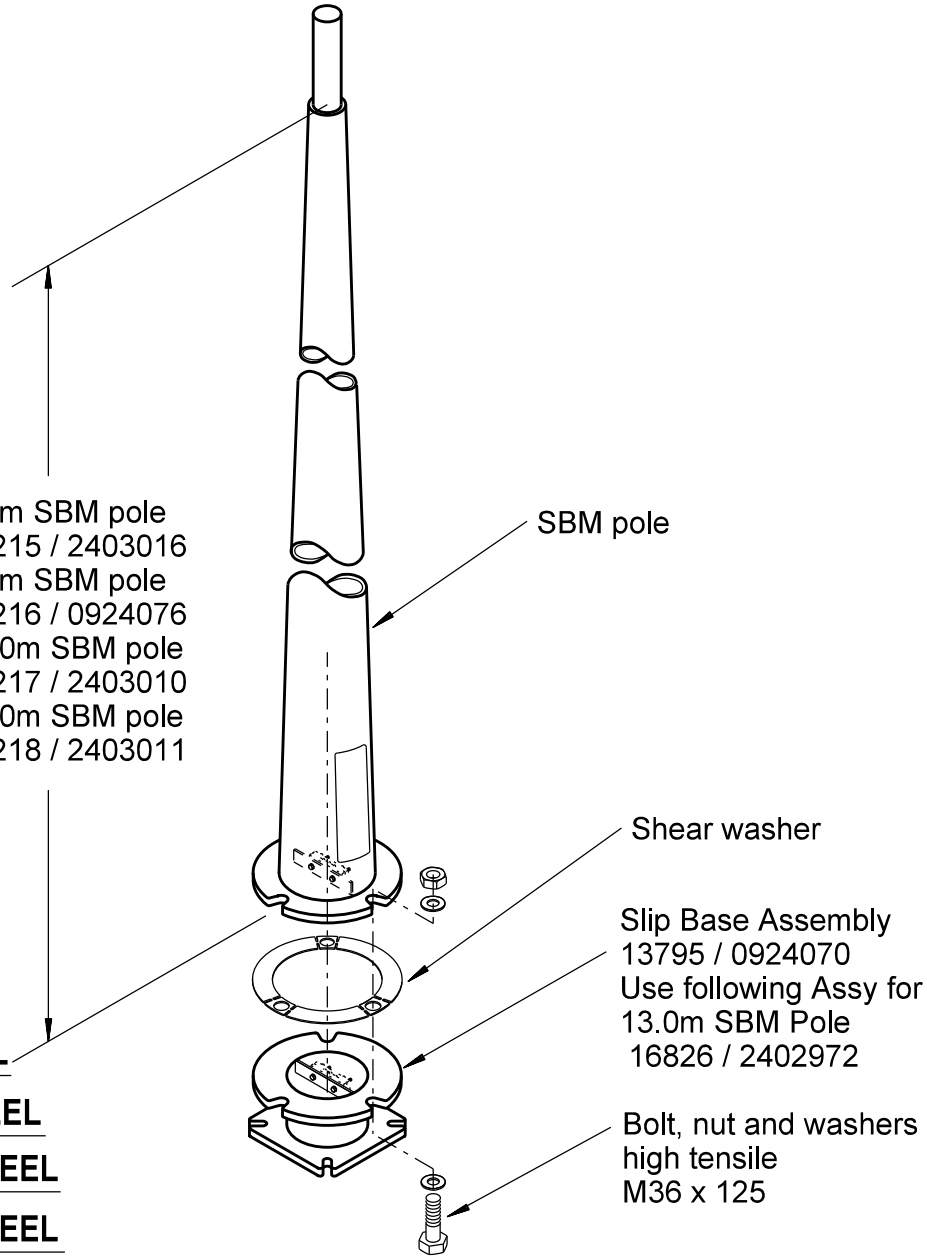

ASSEMBLY 828-1 MAJOR ROAD POLE 7.0m SLIP BASE MOUNTED STEEL

ASSEMBLY 828-2 MAJOR ROAD POLE 8.5m SLIP BASE MOUNTED STEEL

ASSEMBLY 828-3 MAJOR ROAD POLE 10.0m SLIP BASE MOUNTED STEEL

ASSEMBLY 828-4 MAJOR ROAD POLE 13.0m SLIP BASE MOUNTED STEEL

A	ORIGINAL ISSUE	REFERENCE DRAWING ENERGEX: Nil	energex	ERGON ENERGY	Approved Ergon: C. Noel 01/05/18
B	12.09.13				Approved Energex: F. Zaini 01/05/18
C	22.03.18	REFERENCE DRAWING ERGON: 5 82 8072 1	© COPYRIGHT 2002 ENERGEX ENERGEX Corporation Limited ABN 40 078 849 055	© COPYRIGHT 2002 ERGON ENERGY Ergon Energy Corporation Limited ABN 50 087 646 062	Checked: P. Relf / A. Bletchly 01/05/18
		This document must not be reproduced in part or whole without written permission from ENERGEX or Ergon Energy	HARD COPY UNCONTROLLED		Drawn: L. Burton / T. Borg 01/10/10

LIGHITNG
ASSEMBLIES
MAJOR ROAD
SLIP BASE MOUNTED STEEL POLE

EE DRWG NO: 1-2-828	VOLUME	FOLDER	PAGE	ISSUE
EGX DRWG NO: 10500-A4-1-2-828	1	2	828	0C

MATERIAL

ENERGEX SC	QTY		ERGON SC
	829-1	829-4	
14108	1 / 1		0924066
16822		1 / 1	2403768

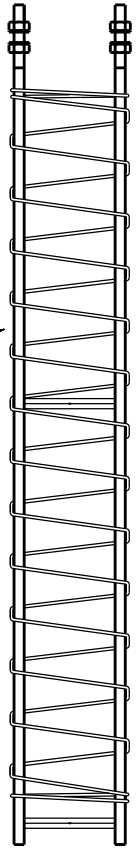

Hold down bolt cage
350 PCD
14108 / 0924066
Use following assy
for 13.0m SBM pole
500 PCD
16822 / 2403768

ASSEMBLY 829-1 **MAJOR ROAD SBM 350 PCD HOLD DOWN BOLT CAGE**

ASSEMBLY 829-4 **MAJOR ROAD SBM 500 PCD HOLD DOWN BOLT CAGE**

A	ORIGINAL ISSUE	REFERENCE DRAWING ENERGEX: NIL	Approved Ergon: C. Noel	Date: 21/03/14	**LIGHTING** ASSEMBLIES MAJOR ROAD SBM POLE HOLD DOWN BOLT CAGE
B	28.02.13	REFERENCE DRAWING ERGON: 5 82 8073 1	Approved Energex: F. Zaini	Date: 21/03/14	
C	12.09.13		Checked: P. Relf / A. Bletchly	Date: 21/03/14	
			Drawn: L. Burton / T. Borg	Date: 01/10/10	

energex
© COPYRIGHT 2002 ENERGEX
ENERGEX Corporation Limited
ABN 40 078 849 055

ERGON ENERGY
© COPYRIGHT 2002 ERGON ENERGY
Ergon Energy Corporation Limited
ABN 50 087 646 062

This document must not be reproduced in part or whole without written permission from ENERGEX or Ergon Energy

HARD COPY UNCONTROLLED

EE DRWG NO: 1-2-829
EGX DRWG NO: 10500-A4-1-2-829

VOLUME	FOLDER	PAGE	ISSUE
1	2	829	0C

MATERIAL

ENERGEX SC	QTY 830-1	ERGON SC
NIL	- / 1	2407012
NIL	- / 1	2406020

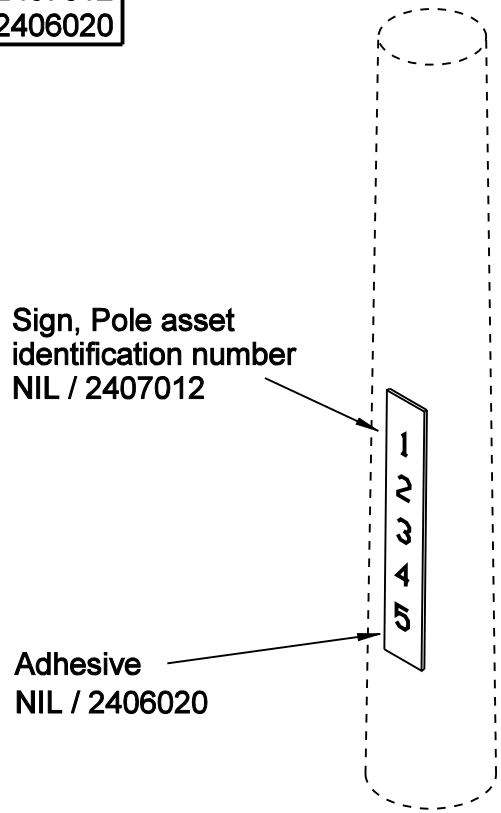

ASSEMBLY 830-1 SIGN, 5 DIGIT ASSET IDENTIFICATION NUMBER GLUED TO ESTATE POLE (MINOR ROAD)

MATERIAL

ENERGEX SC	QTY 830-5	ERGON SC
NIL	- / 1	0104333
NIL	- / 1	2406020

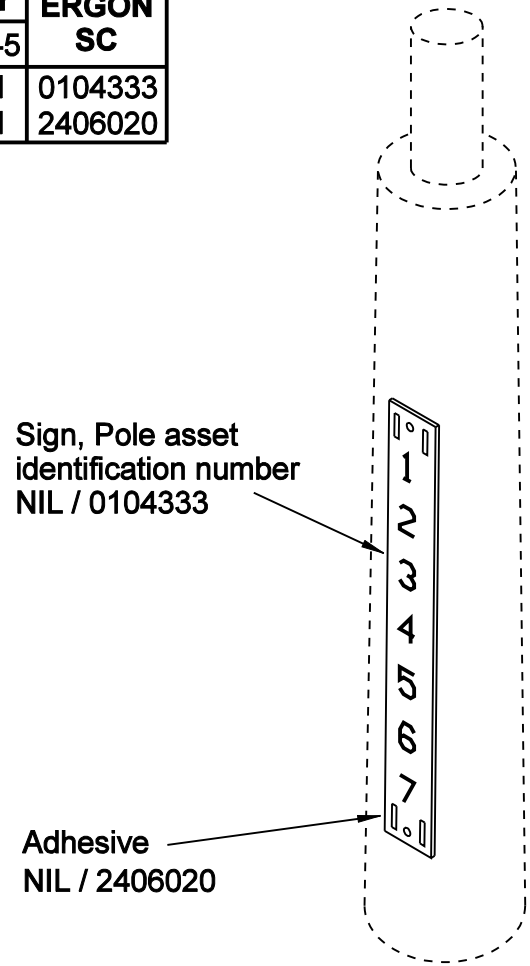

ASSEMBLY 830-5 SIGN, 7 DIGIT ASSET IDENTIFICATION NUMBER GLUED TO STEEL OR CONC. POLE (MAJOR/MINOR ROAD)

A	ORIGINAL ISSUE	REFERENCE DRAWING ENERGEX: NIL REFERENCE DRAWING ERGON: 5 82 8067 1 This document must not be reproduced in part or whole without written permission from ENERGEX or Ergon Energy	energex © COPYRIGHT 2002 ENERGEX ENERGEX Corporation Limited ABN 40 078 849 055	ERGON. ENERGY © COPYRIGHT 2002 ERGON ENERGY Ergon Energy Corporation Limited ABN 50 087 646 062	Approved Ergon: J. Brooks, Date: 14/10/10 Approved Energex: R. English, Date: 14/10/10 Checked: D. Taylor / B. Oyegoke, Date: 14/10/10 Drawn: L. Burton / T. Borg, Date: 01/10/10

HARD COPY UNCONTROLLED

LIGHTING
ASSEMBLIES - ERGON ENERGY ONLY
SIGN (ASSET IDENTIFICATION NUMBER)
TO POLE

EE DRWG NO: 1-2-830
EGX DRWG NO: 10500-A4-1-2-830

VOLUME	FOLDER	PAGE	ISSUE
1	2	830	0A

MATERIAL

ENERGEX SC	QTY 831-1	QTY 831-2	ERGON SC
15528	1 / 1		0168052
06839	1 / 1		0168055
1010901	1 / 1	1 / 1	1010901
08345	AR	AR	1542919
Nil	- / 4	- / 4	2427359
Nil	- / 1	- / 1	0184880

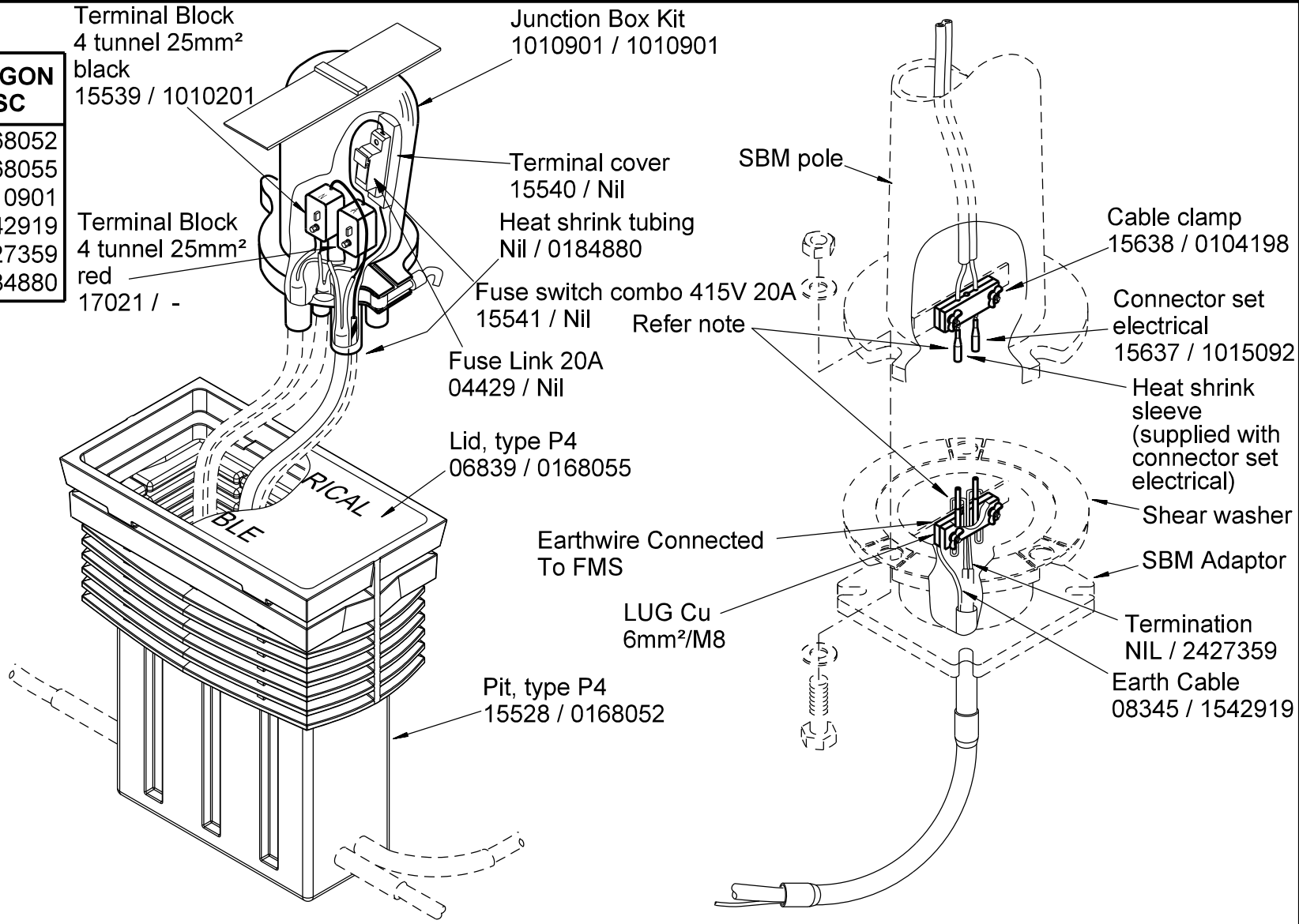

Note:
Position connector components with larger outside diameter above connector components with smaller outside diameter.

ASSEMBLY 831-1 **CONNECTION SBM POLE TO PIT SINGLE PHASE - CONTAINS PIT, LID & JUNCTION BOX KIT**

ASSEMBLY 831-2 **CONNECTION SBM POLE TO PIT SINGLE PHASE - CONTAINS JUNCTION BOX KIT ONLY**

A	ORIGINAL ISSUE	
C	23.10.14	
D	19.12.16	
E	22.03.18	
F	26.06.19	

REFERENCE DRAWING ENERGEX: Nil

REFERENCE DRAWING ERGON: 5 82 8062 1

This document must not be reproduced in part or whole without written permission from ENERGEX or Ergon Energy

energex

© COPYRIGHT 2019 ENERGEX
ENERGEX Corporation Limited
ABN 40 078 849 055

ERGON ENERGY

© COPYRIGHT 2019 ERGON ENERGY
Ergon Energy Corporation Limited
ABN 50 087 646 062

HARD COPY UNCONTROLLED

		Date
Approved Ergon	A. Bletchly	09/08/19
Approved Energex	A. Bletchly	09/08/19
Checked	K. Slater	09/08/19
Drawn	L. Burton / T. Borg	01/10/10

LIGHTING
ASSEMBLIES
MAJOR ROAD
CONNECTION SBM POLE TO PIT SINGLE PHASE

EE DRWG NO: 1-2-831
EGX DRWG NO: 10500-A4-1-2-831

VOLUME	FOLDER	PAGE	ISSUE
1	2	831	0F

MATERIAL

ENERGEX SC	QTY				ERGON SC
	832-1	832-2	832-3	832-4	
17258 07112	1 / 1 AR	1 / 1 AR	1 / 1 AR	1 / 1 AR	2418861 2403244

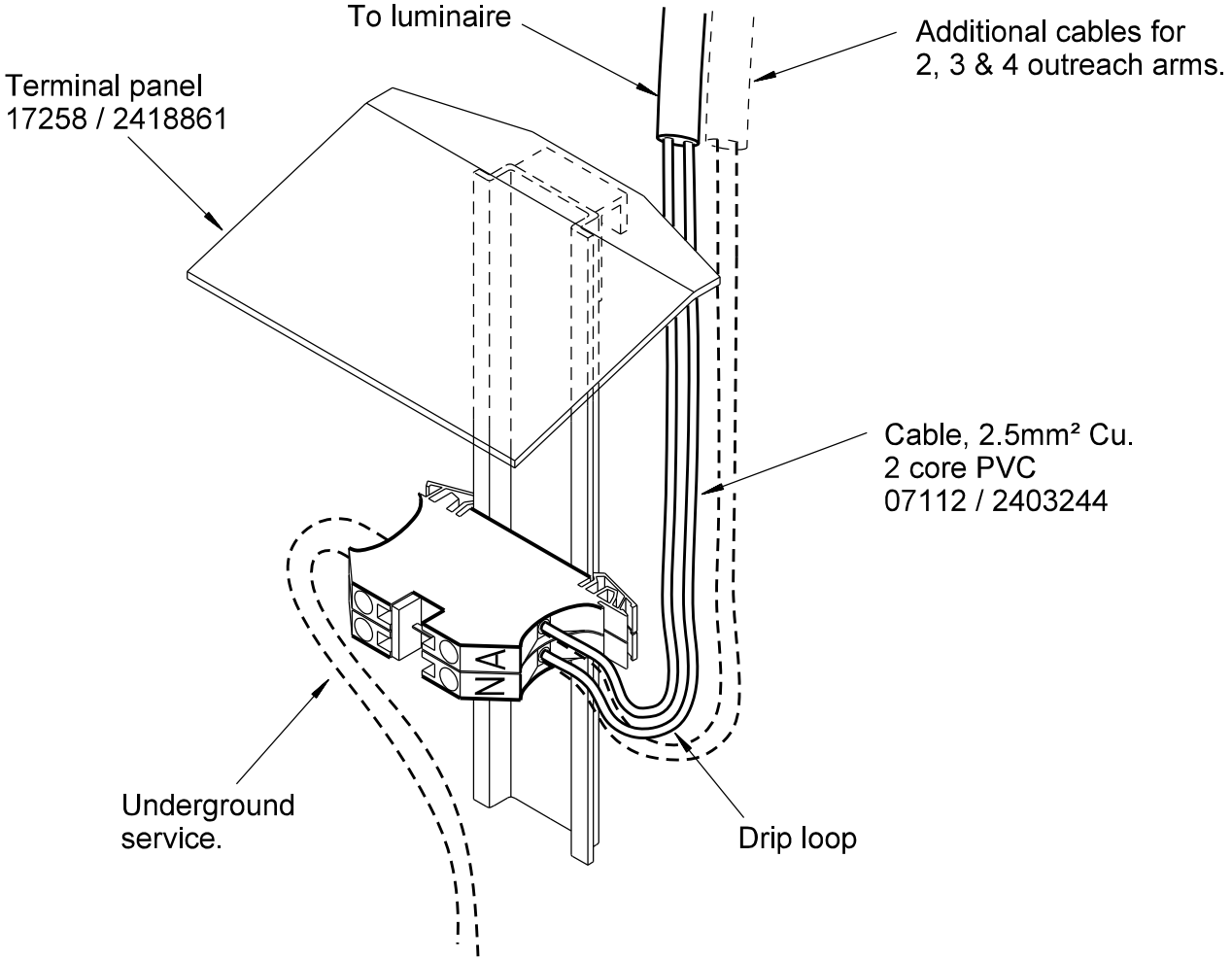

ASSEMBLY 832-1 MAJOR ROAD TERMINAL PANEL & CABLE TO 1 OUTREACH SBM POLE

ASSEMBLY 832-2 MAJOR ROAD TERMINAL PANEL & CABLE TO 2 OUTREACH SBM POLE

ASSEMBLY 832-3 MAJOR ROAD TERMINAL PANEL & CABLE TO 3 OUTREACH SBM POLE

ASSEMBLY 832-4 MAJOR ROAD TERMINAL PANEL & CABLE TO 4 OUTREACH SBM POLE

A	ORIGINAL ISSUE	
B	26.10.16	
C	04.09.18	

REFERENCE DRAWING ENERGEX
4927-A4-7.2,7.3

REFERENCE DRAWING ERGON
5 82 8074 1

This document must not be reproduced in part or whole without written permission from ENERGEX or Ergon Energy

energex

© COPYRIGHT 2019 ENERGEX
ENERGEX Corporation Limited
ABN 40 078 849 055

ERGON ENERGY

© COPYRIGHT 2019 ERGON ENERGY
Ergon Energy Corporation Limited
ABN 50 087 646 062

HARD COPY UNCONTROLLED

Approved Ergon	A. Bletchly	01/03/19
Approved Energex	A. Bletchly	01/03/19
Checked	K. Slater	01/03/19
Drawn	L. Burton / T. Borg	01/10/10

LIGHTING
ASSEMBLIES
MAJOR ROAD SBM POLE
TERMINAL PANEL

EE DRWG NO: 1-2-832
EGX DRWG NO: 10500-A4-1-2-832

VOLUME	FOLDER	PAGE	ISSUE
1	2	832	0C

MATERIAL

ENERGEX SC	QTY 833-1	QTY 833-2	ERGON SC
15528	1 / 1		0168052
06839	1 / 1		0168055
15551		1 / -	NIL
15552		1 / -	NIL

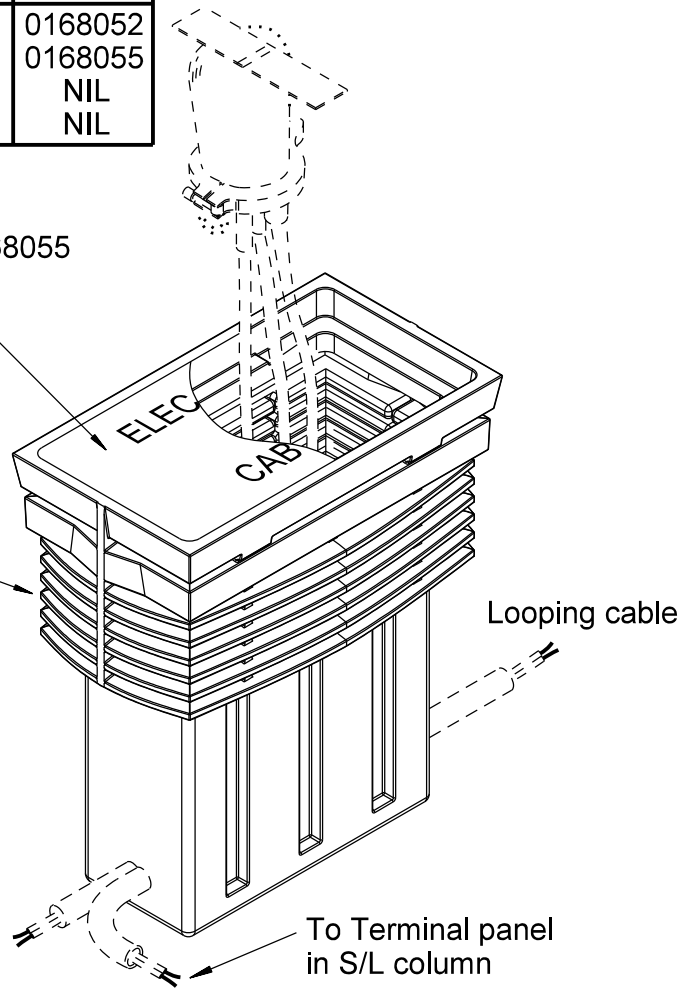

ASSEMBLY 833-1 **PIT AND LID TYPE 4**

ASSEMBLY 833-2 **PIT AND LID TYPE 2**

MATERIAL

ENERGEX SC	QTY 833-5	ERGON SC
NIL	1 / 1	0184880
2422160	1 / 1	2422160
NIL	1 / 1	2427359

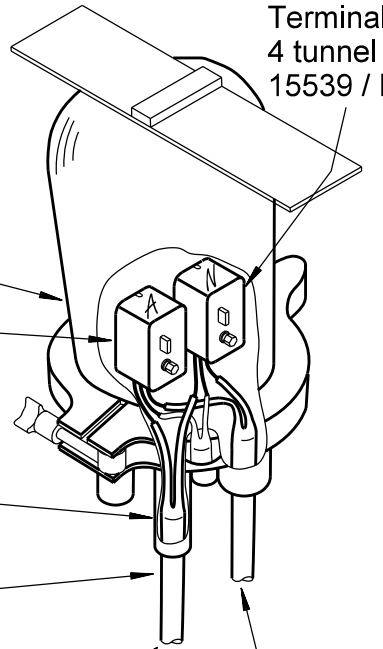

NOTES

1. Install in accordance with supplier's installation instructions.
2. Ensure completed junction box is watertight.
3. Support straps included in Energex S.C. 2422160

ASSEMBLY 833-5 **JUNCTION BOX / ENCLOSURE & CABLE INSECT PROTECTED**

A	ORIGINAL ISSUE	REFERENCE DRAWING ENERGEX 4927-A4-10.3,10.10	energex	Approved Ergon A. Bletchly 09/08/19	**LIGHTING** ASSEMBLIES BPM & BIG POLES MAJOR / MINOR ROAD UNDERGROUND PIT LOOPING CONNECTION
B	06.03.13			Approved Energex A. Bletchly 09/08/19	
C	23.10.14	REFERENCE DRAWING ERGON 5 82 8075 1	© COPYRIGHT 2019 ENERGEX ENERGEX Corporation Limited ABN 40 078 849 055	Checked K. Slater 09/08/19	
D	26.06.19	This document must not be reproduced in part or whole without written permission from ENERGEX or Ergon Energy	HARD COPY UNCONTROLLED	Drawn L. Burton / T. Borg 01/10/10	

© COPYRIGHT 2019 ERGON ENERGY Ergon Energy Corporation Limited ABN 50 087 646 062

EE DRWG NO: 1-2-833	VOLUME	FOLDER	PAGE	ISSUE
EGX DRWG NO: 10500-A4-1-2-833	1	2	833	0D

MATERIAL

ENERGEX SC	QTY 834-1	QTY 834-2	QTY 834-4	ERGON SC
11685	1 / 1	1 / 1	1 / -	0453090
15978	1 / 1	1 / 1	1 / -	0453084
11430	2 / 2			0104435
NIL		- / 1		2406020
02477			2m / -	NIL
02481			1 / -	NIL

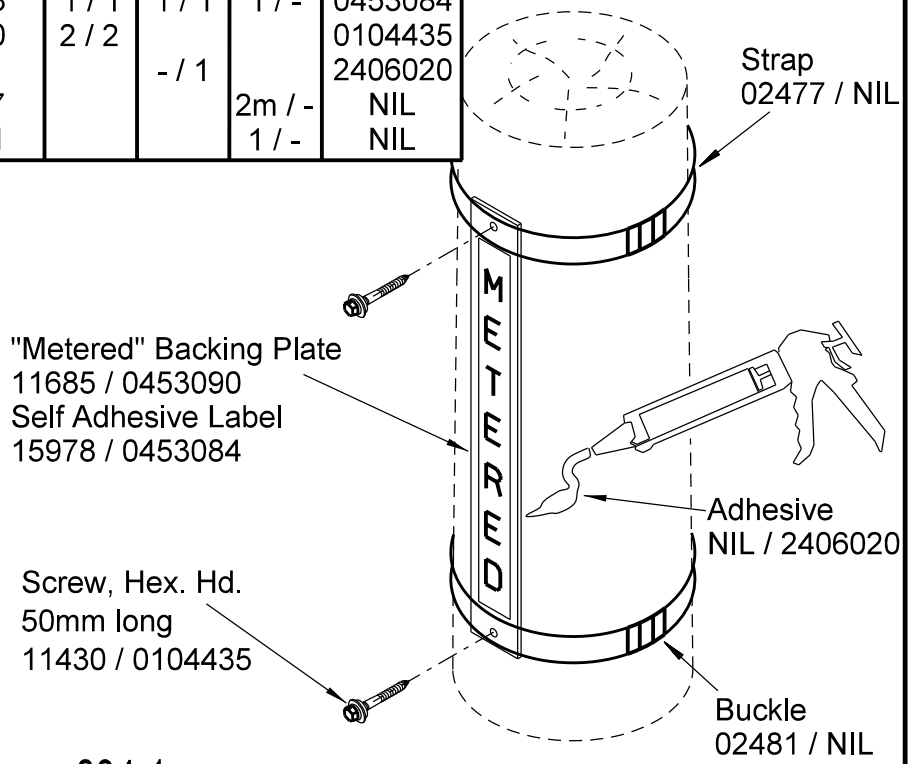

ASSEMBLY 834-1 NON-ENERGEX/ERGON "METERED" IDENTIFICATION SIGN SCREWED TO WOOD POLE

ASSEMBLY 834-2 NON-ENERGEX/ERGON "METERED" IDENTIFICATION SIGN GLUED TO CONCRETE POLE

ASSEMBLY 834-4 NON-ENERGEX/ERGON "METERED" IDENTIFICATION SIGN STRAPPED TO CONCRETE POLE

MATERIAL

ENERGEX SC	QTY 834-3	ERGON SC
15978	1 / 1	0453084

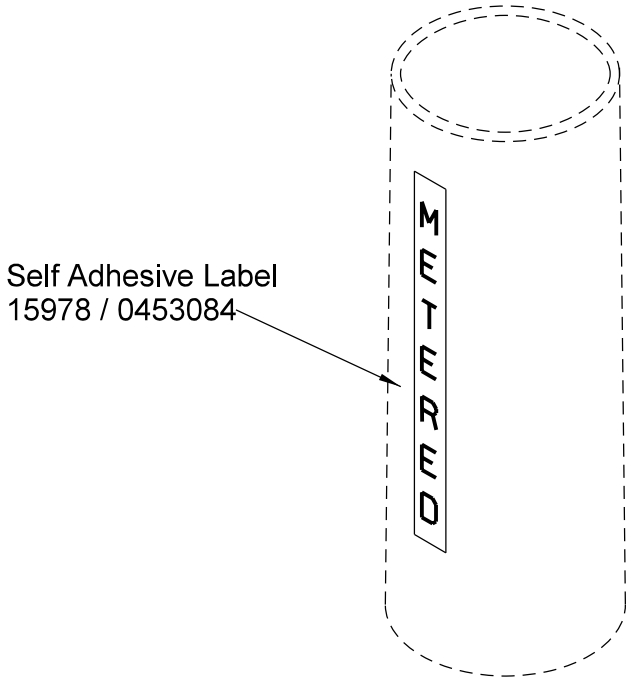

ASSEMBLY 834-3 NON-ENERGEX/ERGON "METERED" IDENTIFICATION SIGN SELF ADHESIVED TO METAL POLE

A	ORIGINAL ISSUE	
B	07.01.13	
C	26.10.16	

REFERENCE DRAWING ENERGEX: 4927-A4-2.40

REFERENCE DRAWING ERGON: NIL

This document must not be reproduced in part or whole without written permission from ENERGEX or Ergon Energy

energex

© COPYRIGHT 2002 ENERGEX
ENERGEX Corporation Limited
ABN 40 078 849 055

ERGON ENERGY

© COPYRIGHT 2002 ERGON ENERGY
Ergon Energy Corporation Limited
ABN 50 087 646 062

HARD COPY UNCONTROLLED

		Date
Approved Ergon	C. Noel	19/04/17
Approved Energex	F. Zaini	19/04/17
Checked	P. Relf / A. Bletchly	01/04/17
Drawn	L. Burton / T. Borg	01/10/10

LIGHTING

ASSEMBLIES
METERED IDENTIFICATION SIGN
ATTACHMENT TO POLE

EE DRWG NO: 1-2-834
EGX DRWG NO: 10500-A4-1-2-834

VOLUME	FOLDER	PAGE	ISSUE
1	2	834	0C

MATERIAL

ENERGEX SC	QTY 835-1	QTY 835-2	ERGON SC
NIL	- / 1	- / 1	0453094
NIL	- / 1	- / 1	0453078
NIL	- / 2		0104435
NIL		- / 1	2406020

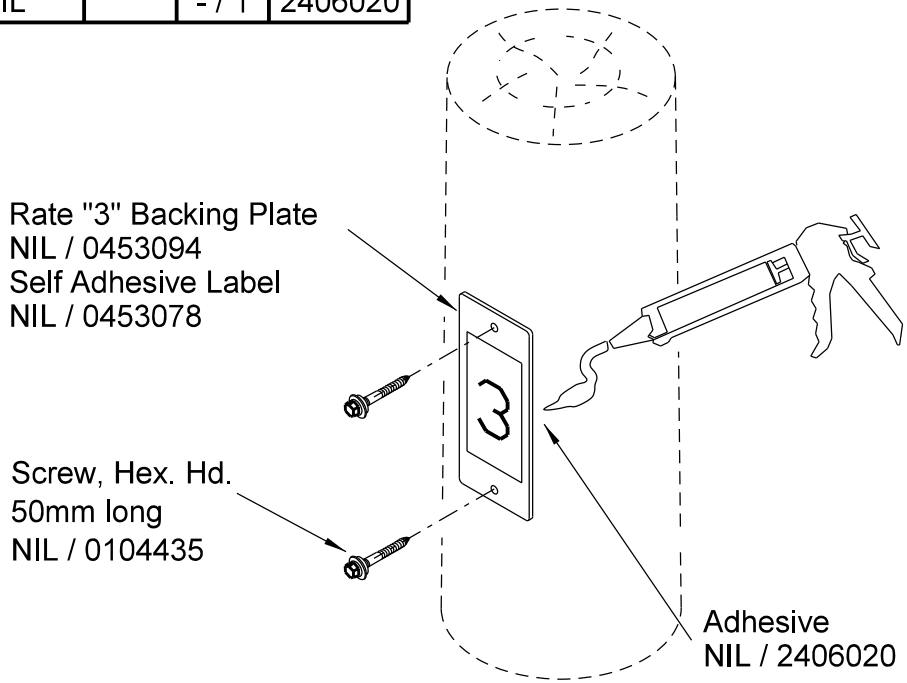

ASSEMBLY 835-1 NON-ENERGEX/ERGON RATE "3" IDENTIFICATION SIGN SCREWED TO WOOD POLE

ASSEMBLY 835-2 NON-ENERGEX/ERGON RATE "3" IDENTIFICATION SIGN GLUED TO CONCRETE POLE

MATERIAL

ENERGEX SC	QTY 835-3	QTY 835-4	ERGON SC
20204	1 / 1		0453078
15831		1 / -	NIL

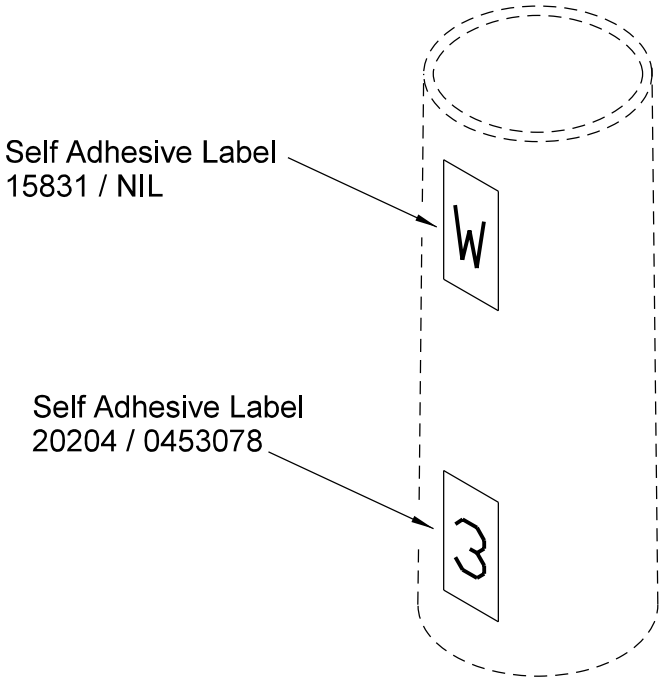

ASSEMBLY 835-3 NON-ENERGEX/ERGON RATE "3" IDENTIFICATION SIGN SELF ADHESIVED TO METAL POLE

ASSEMBLY 835-4 NON-ENERGEX/ERGON "W" IDENTIFICATION SIGN SELF ADHESIVED TO METAL POLE

A	ORIGINAL ISSUE	REFERENCE DRAWING ENERGEX: 4927-A4-2.40	energex	Approved Ergon: C. Noel	Date: 19/04/17
B	21.03.17	REFERENCE DRAWING ERGON: NIL		Approved Energex: F. Zaini	Date: 19/04/17
				Checked: P. Relf / A. Bletchly	Date: 01/04/17
				Drawn: L. Burton / T. Borg	Date: 01/10/10

This document must not be reproduced in part or whole without written permission from ENERGEX or Ergon Energy

© COPYRIGHT 2002 ENERGEX
ENERGEX Corporation Limited
ABN 40 078 849 055

© COPYRIGHT 2002 ERGON ENERGY
Ergon Energy Corporation Limited
ABN 50 087 646 062

HARD COPY UNCONTROLLED

LIGHTING
ASSEMBLIES
RATE 3 IDENTIFICATION SIGN
ATTACHMENT TO POLE

EE DRWG NO: 1-2-835	VOLUME	FOLDER	PAGE	ISSUE
EGX DRWG NO: 10500-A4-1-2-835	1	2	835	0B

MATERIAL

ENERGEX SC	QTY 836-1	ERGON SC
NIL	10m	0406297
NIL	- / 4	0406311
NIL	- / 2	1780586
NIL	- / 1	2400453
NIL	- / 1	2403730
NIL	- / 1	2426112

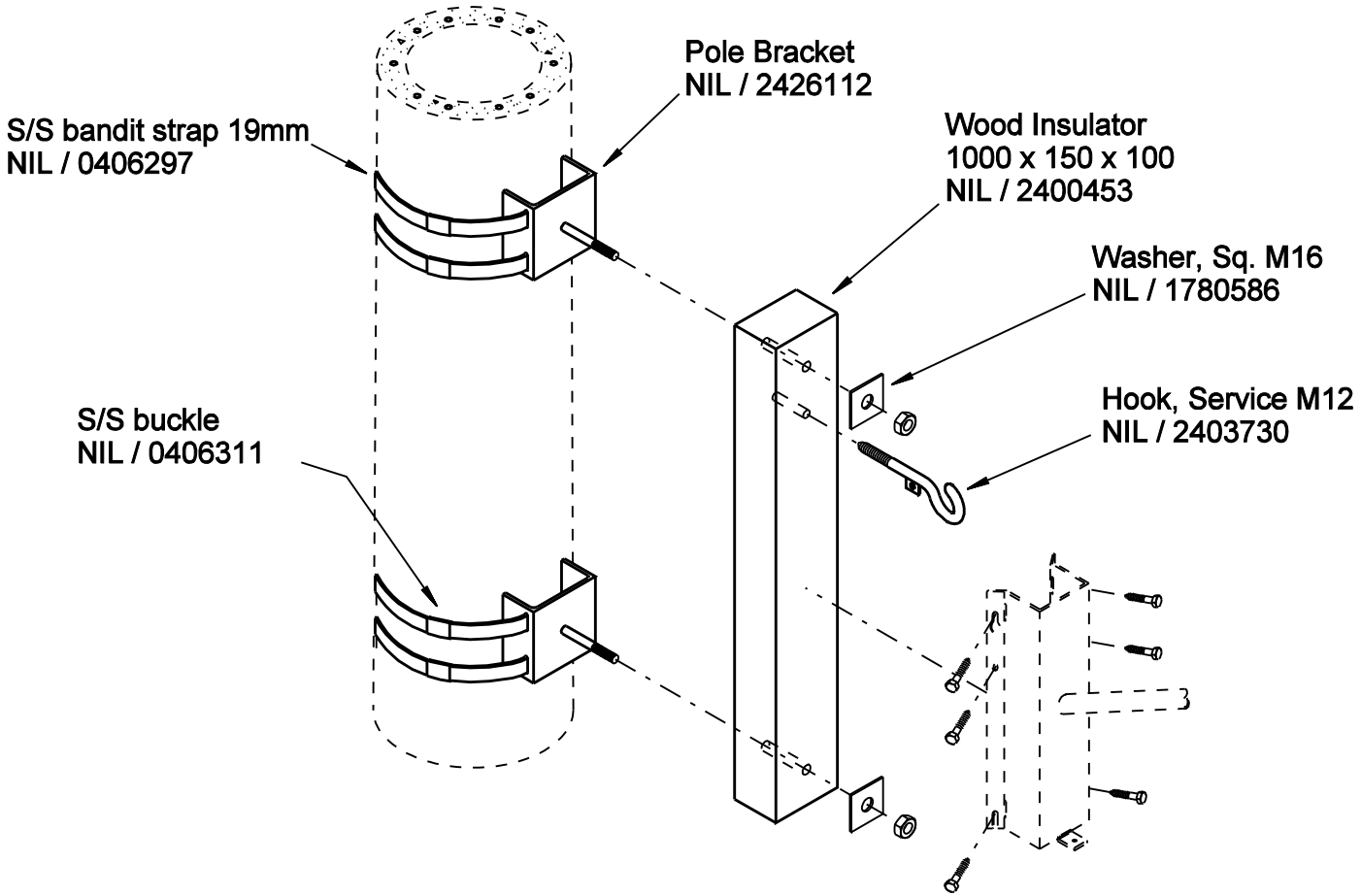

NOTE:
All bands to be double wrapped

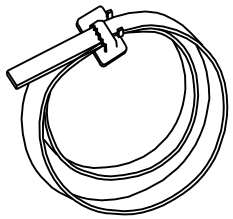

ASSEMBLY 836-1 BRACKET FOR INSULATING STREET LIGHT MI1, MI2, MA1 & MA2 TO CONCRETE POLE

A	ORIGINAL ISSUE

REFERENCE DRAWING ENERGEX: NIL

REFERENCE DRAWING ERGON: 5 82 8083 1

This document must not be reproduced in part or whole without written permission from ENERGEX or Ergon Energy

energex

© COPYRIGHT 2002 ENERGEX
ENERGEX Corporation Limited
ABN 40 078 849 055

ERGON. ENERGY

© COPYRIGHT 2002 ERGON ENERGY
Ergon Energy Corporation Limited
ABN 50 087 646 062

HARD COPY UNCONTROLLED

		Date
Approved Ergon	J. Brooks	14/10/10
Approved Energex	R. English	14/10/10
Checked	D. Taylor / B. Oyegoke	14/10/10
Drawn	L. Burton / T. Borg	01/10/10

LIGHTING
ASSEMBLIES - ERGON ENERGY ONLY
BRACKET FOR INSULATING STREETLIGHT
MI1, MI2, MA1 & MA2 TO CONCRETE POLE

EE DRWG NO: 1-2-836
EGX DRWG NO: 10500-A4-1-2-836

VOLUME	FOLDER	PAGE	ISSUE
1	2	836	0A

MATERIAL

ENERGEX SC	QTY 837-1	QTY 837-5	ERGON SC
NIL	15m	15m	0406297
NIL	- / 4	- / 4	0406311
NIL	- / 1	- / 1	1703395
NIL	- / 2	- / 2	1777542
NIL	- / 2	- / 2	1780586
NIL	- / 1		2403000
NIL	- / 1	- / 1	2403730
NIL		- / 1	2405717
NIL	- / 1	- / 1	2426112

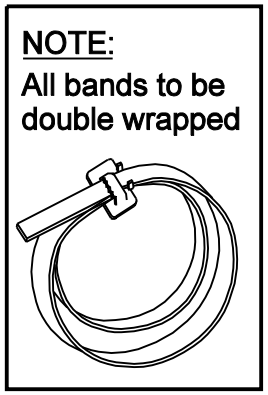

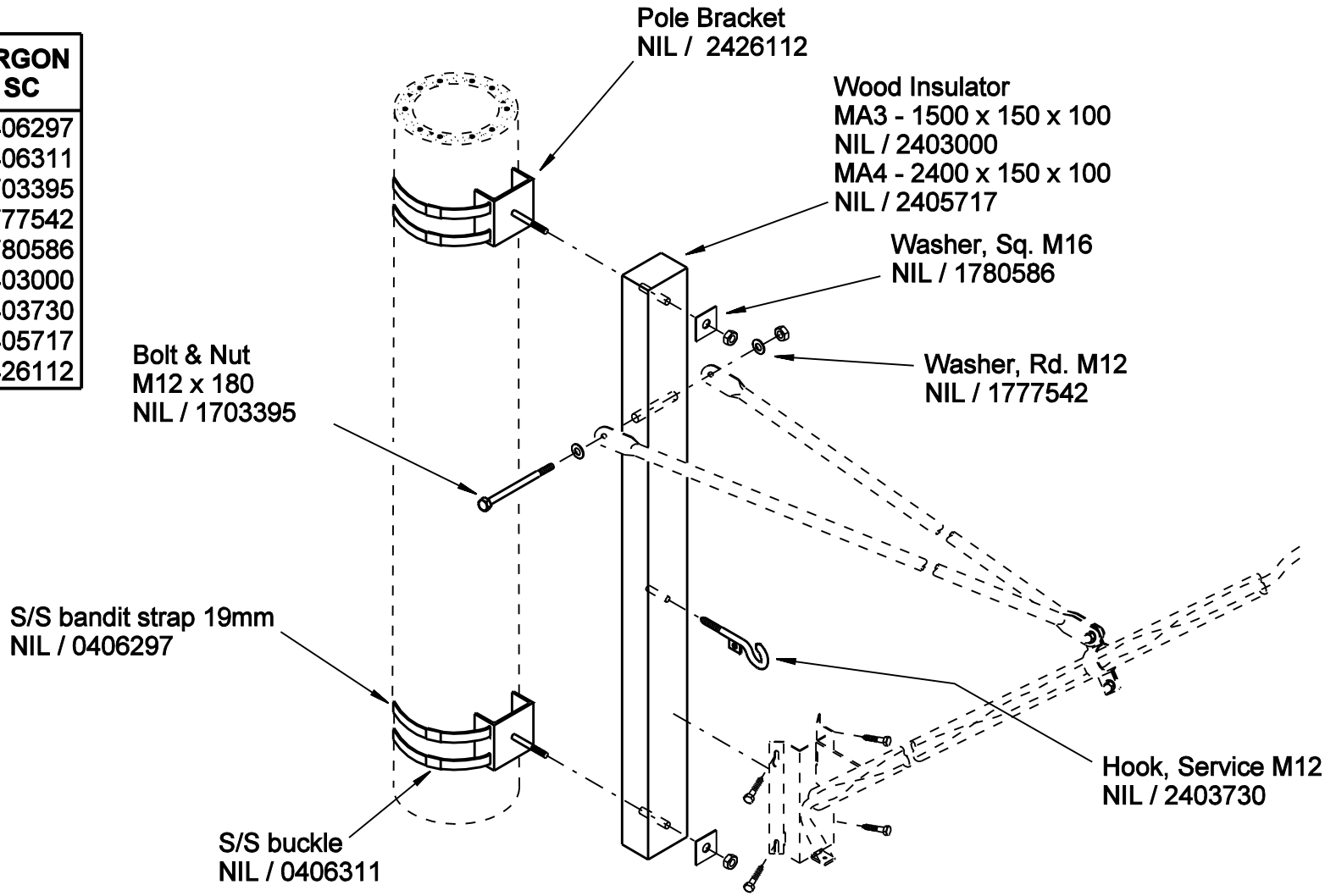

ASSEMBLY 837-1 BRACKET FOR INSULATING STREET LIGHT MA3 TO CONCRETE POLE

ASSEMBLY 837-5 BRACKET FOR INSULATING STREET LIGHT MA4 TO CONCRETE POLE

A	ORIGINAL ISSUE

REFERENCE DRAWING ENERGEX: NIL

REFERENCE DRAWING ERGON: 5 82 8086 1

This document must not be reproduced in part or whole without written permission from ENERGEX or Ergon Energy

energex

© COPYRIGHT 2002 ENERGEX
ENERGEX Corporation Limited
ABN 40 078 849 055

ERGON. ENERGY

© COPYRIGHT 2002 ERGON ENERGY
Ergon Energy Corporation Limited
ABN 50 087 646 062

HARD COPY UNCONTROLLED

		Date
Approved Ergon	J. Brooks	14/10/10
Approved Energex	R. English	14/10/10
Checked	D. Taylor / B. Oyegoke	14/10/10
Drawn	L. Burton / T. Borg	01/10/10

LIGHTING

ASSEMBLIES - ERGON ENERGY ONLY
BRACKET FOR INSULATING STREETLIGHT
MA3 & MA4 TO CONCRETE POLE

EE DRWG NO: 1-2-837
EGX DRWG NO: 10500-A4-1-2-837

VOLUME	FOLDER	PAGE	ISSUE
1	2	837	0A

MATERIAL

ENERGEX SC	QTY 838-1	ERGON SC
NIL	AR	0184880
NIL	- / 1	2427359

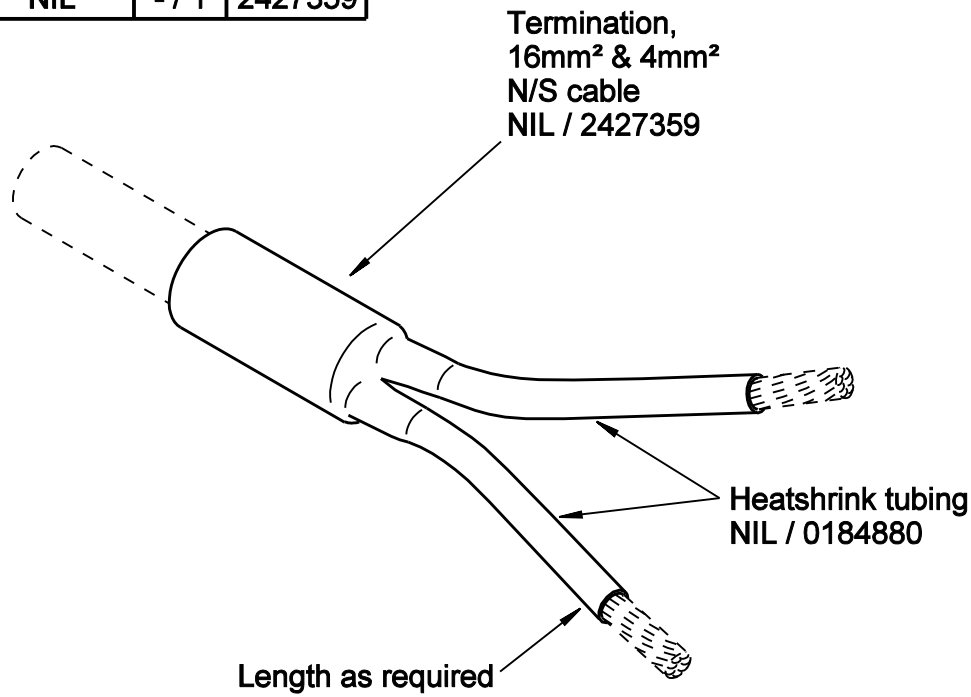

ASSEMBLY 838-1 TERMINATION 16mm² & 4mm² N/S CABLE

MATERIAL

ENERGEX SC	QTY 838-5	ERGON SC
NIL	- / 1	2430379

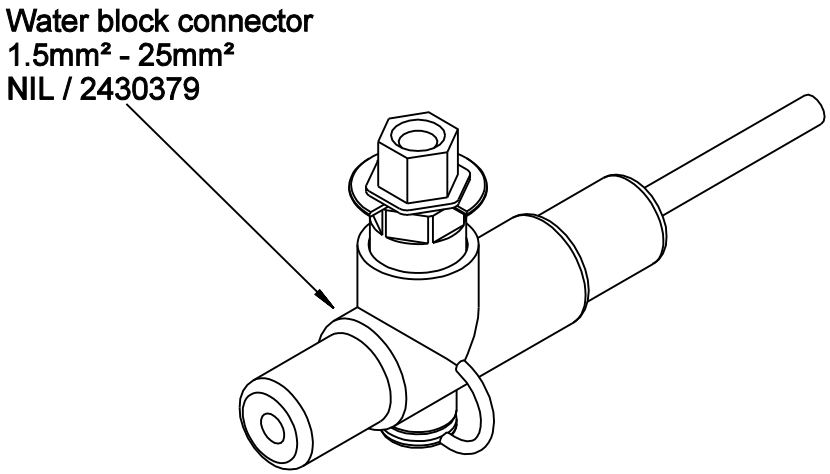

ASSEMBLY 838-5 WATER BLOCK CONNECTOR 1.5 - 25mm²

A	ORIGINAL ISSUE	REFERENCE DRAWING ENERGEX: NIL	Approved Ergon: J. Brooks	Date: 14/10/10	**LIGHTING**
		REFERENCE DRAWING ERGON: 5 82 8089 1	Approved Energex: R. English	Date: 14/10/10	ASSEMBLIES - ERGON ENERGY ONLY
			Checked: D. Taylor / B. Oyegoke	Date: 14/10/10	TERMINATION 16mm² & 4mm² N/S CABLE
			Drawn: L. Burton / T. Borg	Date: 01/10/10	WATER BLOCK CONNECTOR 1.5mm² - 2.5mm²

This document must not be reproduced in part or whole without written permission from ENERGEX or Ergon Energy

energex
© COPYRIGHT 2002 ENERGEX
ENERGEX Corporation Limited
ABN 40 078 849 055

ERGON. ENERGY
© COPYRIGHT 2002 ERGON ENERGY
Ergon Energy Corporation Limited
ABN 50 087 646 062

HARD COPY UNCONTROLLED

EE DRWG NO: 1-2-838	VOLUME	FOLDER	PAGE	ISSUE
EGX DRWG NO: 10500-A4-1-2-838	1	2	838	0A

MATERIAL

ENERGEX SC	QTY 839-2	ERGON SC
16822	1 / 1	2403768
17121	AR	2406677
17030	1 / 1	2406976

DIMENSIONS

DIM 'A':
750mm min. footpath (Ergon)
600mm min. footpath (Energex)

NOTES:

1. This assembly is for use with the 13.0m BPM pole.
2. Concrete not included in material.
   Min. concrete volume:
   750 dia foundation = 1.02m³
3. Prepare and place concrete in accordance with Section 17 of AS3600:2009.
4. Concrete shall be grade 25MPa.
   Place concrete into Auger hole without form.
5. Minimum cover to reinforcement, 65mm.
   Use nearest oversize Auger.
6. Orientate hold down bolts in footing with the 2 bolts nearest road, parallel to road.
7. Locate conduit/s and bend/s to exit top of footing on pole ℄ and exit side/s of footing to suit direction of incoming conduit/s.
8. Hole to be filled within 48 hours of excavation.
9. Suitable for most soils other than:-
   (i) Loose sand (commonly occurring in sand dunes).
   (ii) Swampy silt deposits (commonly occurring in swamps, coastal salt pans and mud flats).
   (iii) Loose, uncompacted fill material.
   (iv) Clay with shear strength less than 50kPa.
   Seek structural engineers advice on foundation design for unsuitbale soils.
10. If installed in an overhead supply area then securely plug conduit to avoid ingress of soil.

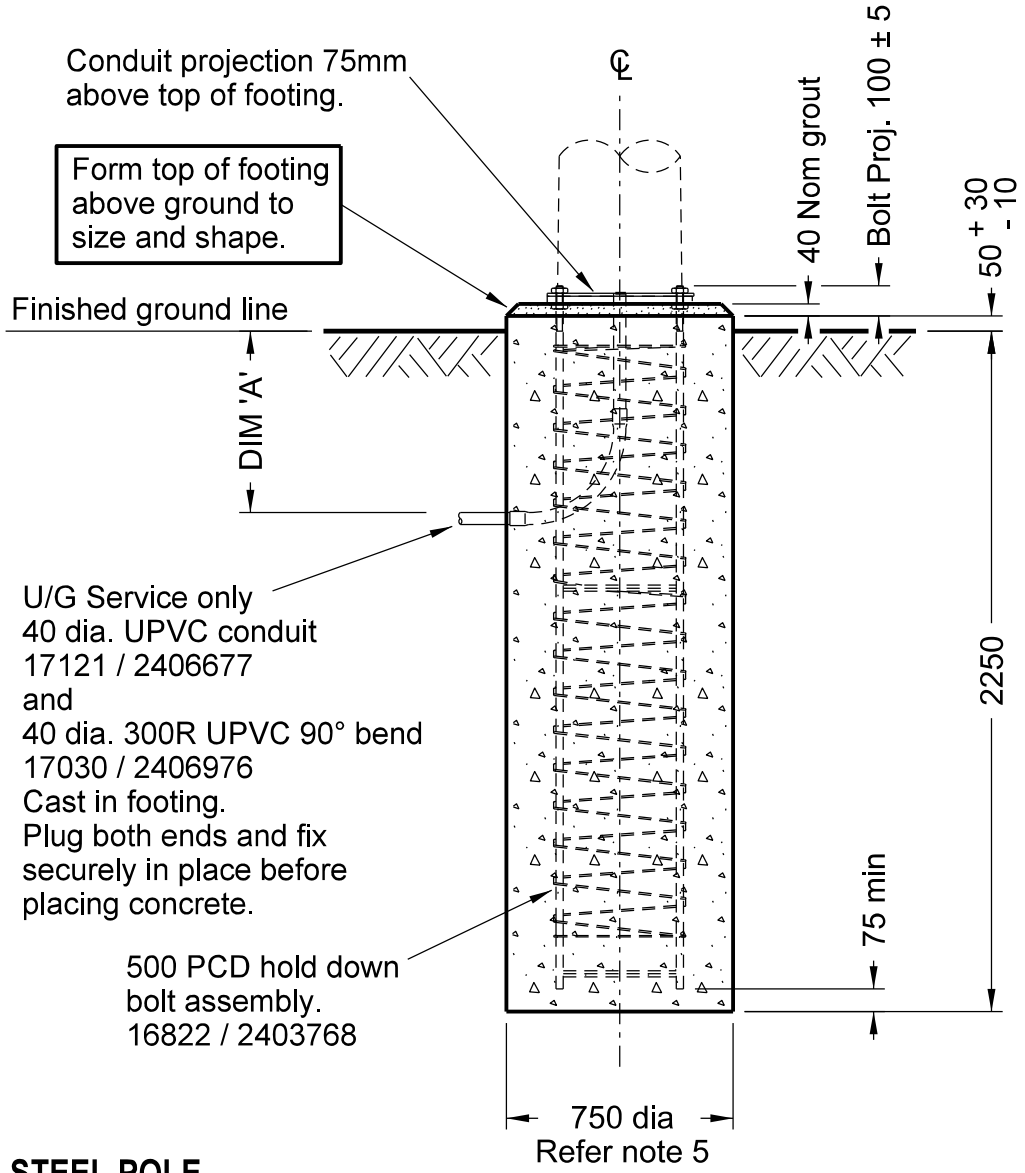

ASSEMBLY 839-2 MAJOR ROAD FOUNDATION 500 PCD BPM STEEL POLE

A	ORIGINAL ISSUE	REFERENCE DRAWING ENERGEX: NIL	energex	Approved Ergon: C. Noel	Date: 01/04/16
B	04.03.13			Approved Energex: F. Zaini	Date: 01/04/16
C	12.09.13	REFERENCE DRAWING ERGON: NIL		Checked: P. Relf / A. Bletchly	Date: 01/04/16
D	20.10.14			Drawn: L. Burton / T. Borg	Date: 01/10/10

This document must not be reproduced in part or whole without written permission from ENERGEX or Ergon Energy

© COPYRIGHT 2002 ENERGEX
ENERGEX Corporation Limited
ABN 40 078 849 055

© COPYRIGHT 2002 ERGON ENERGY
Ergon Energy Corporation Limited
ABN 50 087 646 062

HARD COPY UNCONTROLLED

LIGHITNG
ASSEMBLIES
MAJOR ROAD
BPM STEEL POLE FOUNDATION 500 PCD

EE DRWG NO: 1-2-839
EGX DRWG NO: 10500-A4-1-2-839

VOLUME	FOLDER	PAGE	ISSUE
1	2	839	0D

MATERIAL

ENERGEX SC	QTY 840-1	QTY 840-2	ERGON SC
22391	1 / 1		2433654
22392		1 / 1	2433662
17121	AR	AR	2406677
06514	1 / 1	1 / 1	2406976

DIMENSIONS

DIM 'A':
750mm min. footpath (Ergon)
600mm min. footpath (Energex)

NOTES:

1. Concrete not included in material.
   Min. concrete volume:
   600 dia foundation 1200 deep = 0.40m³
   600 dia foundation 1500 deep = 0.43m³
2. Prepare and place concrete in accordance with Section 17 of AS3600:2009.
3. Concrete shall be grade 25MPa.
   Place concrete into Auger hole without form.
4. Minimum cover to reinforcement, 65mm.
   Use nearest oversize Auger.
5. Orientate hold down bolts in footing with the 2 bolts nearest road, parallel to road.
6. Assy 840-2 for use with 5.5m pole & 2m double outreach (Total 7.5m hgt).
7. Holes to be filled within 48 hours of excavation.
8. Suitable for most soils other than :-
   (i) loose sand (commonly occuring in sand dunes).
   (ii) swampy silt deposits (commonly occuring in swamps, coastal salt pans & mud flats).
   (iii) loose, uncompacted fill material.
   (iv) clays with shear strength less than 50kPa
   Seek structural engineers advice on foundation design for unsuitable soils.
9. Locate conduit and bend to exit top of footing on pole ℄ and exit side of footing to suit direction of incoming conduit.

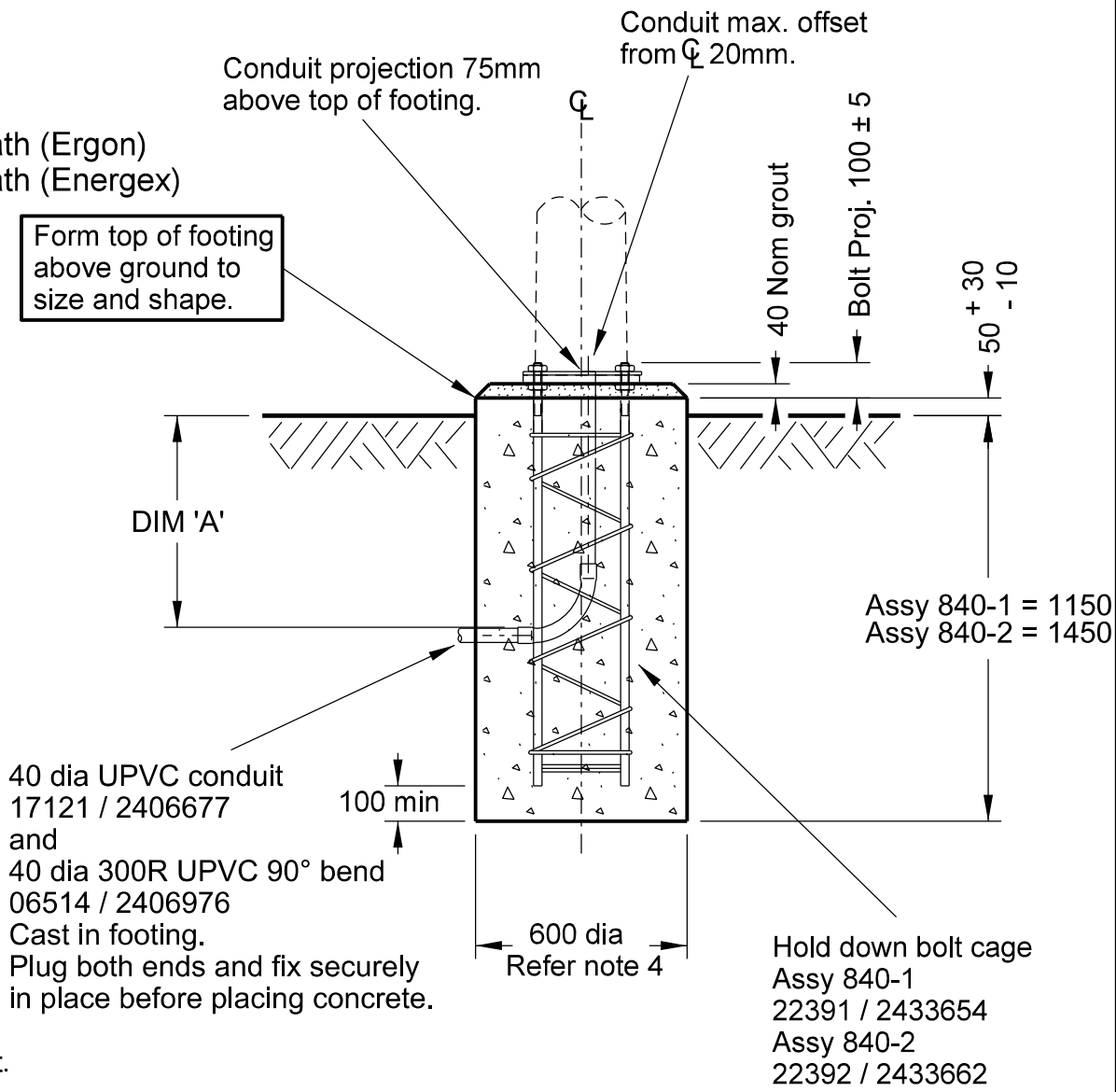

ASSEMBLY 840-1 MINOR ROAD FOUNDATION CAST IN SITU DEPTH 1.2m

ASSEMBLY 840-2 MINOR ROAD FOUNDATION CAST IN SITU DEPTH 1.5m

A	ORIGINAL ISSUE	
B	28.10.13	
C	22.10.14	

REFERENCE DRAWING ENERGEX: 4927-A4-2.59

REFERENCE DRAWING ERGON: NIL

This document must not be reproduced in part or whole without written permission from ENERGEX or Ergon Energy

energex

© COPYRIGHT 2002 ENERGEX
ENERGEX Corporation Limited
ABN 40 078 849 055

ERGON ENERGY

© COPYRIGHT 2002 ERGON ENERGY
Ergon Energy Corporation Limited
ABN 50 087 646 062

HARD COPY UNCONTROLLED

		Date
Approved Ergon	C. Noel	01/04/16
Approved Energex	F. Zaini	01/04/16
Checked	P. Relf / A. Bletchly	01/04/16
Drawn	L. Burton / T. Borg	01/10/10

LIGHTING
ASSEMBLIES
MINOR ROAD
CAST IN SITU FOUNDATION

EE DRWG NO: 1-2-840
EGX DRWG NO: 10500-A4-1-2-840

VOLUME	FOLDER	PAGE	ISSUE
1	2	840	0C

MATERIAL

Assy	Description	QTY	ENERGEX SC	ERGON SC
841-1	MAJOR ROAD LUMINAIRE S100A AEROSCREEN	1 / 1	21580	2403271
841-2	MAJOR ROAD LUMINAIRE S150A AEROSCREEN	1 / 1	21581	1150252
841-3	MAJOR ROAD LUMINAIRE S250A AEROSCREEN	1 / 1	21582	1150255
841-4	MAJOR ROAD LUMINAIRE S400A AEROSCREEN	1 / 1	21583	1150288
841-6	MAJOR ROAD LUMINAIRE H100A AEROSCREEN	1 / 1	22771	2438166
841-7	MAJOR ROAD LUMINAIRE H150A AEROSCREEN	1 / 1	21587	2433423
841-8	MAJOR ROAD LUMINAIRE H250A AEROSCREEN	1 / 1	21588	2433431
841-9	MAJOR ROAD LUMINAIRE H400A AEROSCREEN	1 / 1	21589	2433449

Luminaire

S100A Aeroscreen
21580 / 2403271

S150A Aeroscreen
21581 / 1150252

S250A Aeroscreen
21582 / 1150255

S400A Aeroscreen
21583 / 1150288

H100A Aeroscreen
22771 / 2438166

H150A Aeroscreen
21587 / 2433423

H250A Aeroscreen
21588 / 2433431

H400A Aeroscreen
21589 / 2433449

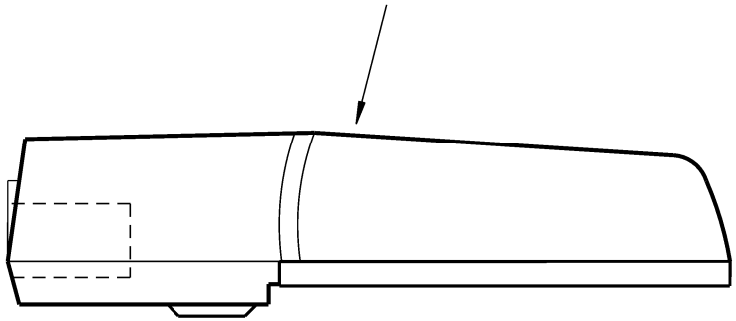

Notes

1. Luminaires are supplied complete with lamp and PE cell fitted.
2. PE Cell assembly 901-2 and lamp assembly 902-2 to 5, 902-10 to 12 & 902-19 are provided for maintenance spares.

A	ORIGINAL ISSUE	
B	07.01.13	
C	18.09.13	

REFERENCE DRAWING ENERGEX: NIL

REFERENCE DRAWING ERGON: NIL

This document must not be reproduced in part or whole without written permission from ENERGEX or Ergon Energy

energex

© COPYRIGHT 2002 ENERGEX
ENERGEX Corporation Limited
ABN 40 078 849 055

ERGON ENERGY

© COPYRIGHT 2002 ERGON ENERGY
Ergon Energy Corporation Limited
ABN 50 087 646 062

HARD COPY UNCONTROLLED

		Date
Approved Ergon	C. Noel	21/03/14
Approved Energex	F. Zaini	21/03/14
Checked	P. Relf / A. Bletchly	21/03/14
Drawn	L. Burton / T. Borg	01/10/10

LIGHTING
ASSEMBLIES
MAJOR ROAD
LUMINAIRES AEROSCREEN

EE DRWG NO: 1-2-841
EGX DRWG NO: 10500-A4-1-2-841

VOLUME	FOLDER	PAGE	ISSUE
1	2	841	0C

MATERIAL

ENERGEX SC	QTY 842-2	ERGON SC
19783	1 / 1	2427284
20286	1 / -	NIL

NOTES:

1. Use nearest oversize auger.
2. Orientate hold down bolts in footing with the 2 bolts nearest road, parallel to road.
3. Holes to be filled within 48 hours of excavation.
4. Suitable for most soils other than:-
   (i) Loose sand (commonly occurring in sand dunes).
   (ii) Swampy silt deposits (commonly occurring in swamps, coastal salt pans and mud flats).
   (iii) Loose, uncompacted fill material.
   (iv) Clay with shear strength less than 50kPA
   Seek structural engineers advice on foundation design for unsuitable soils.
5. Locate conduit on side of foundation to suit direction of incoming conduit.

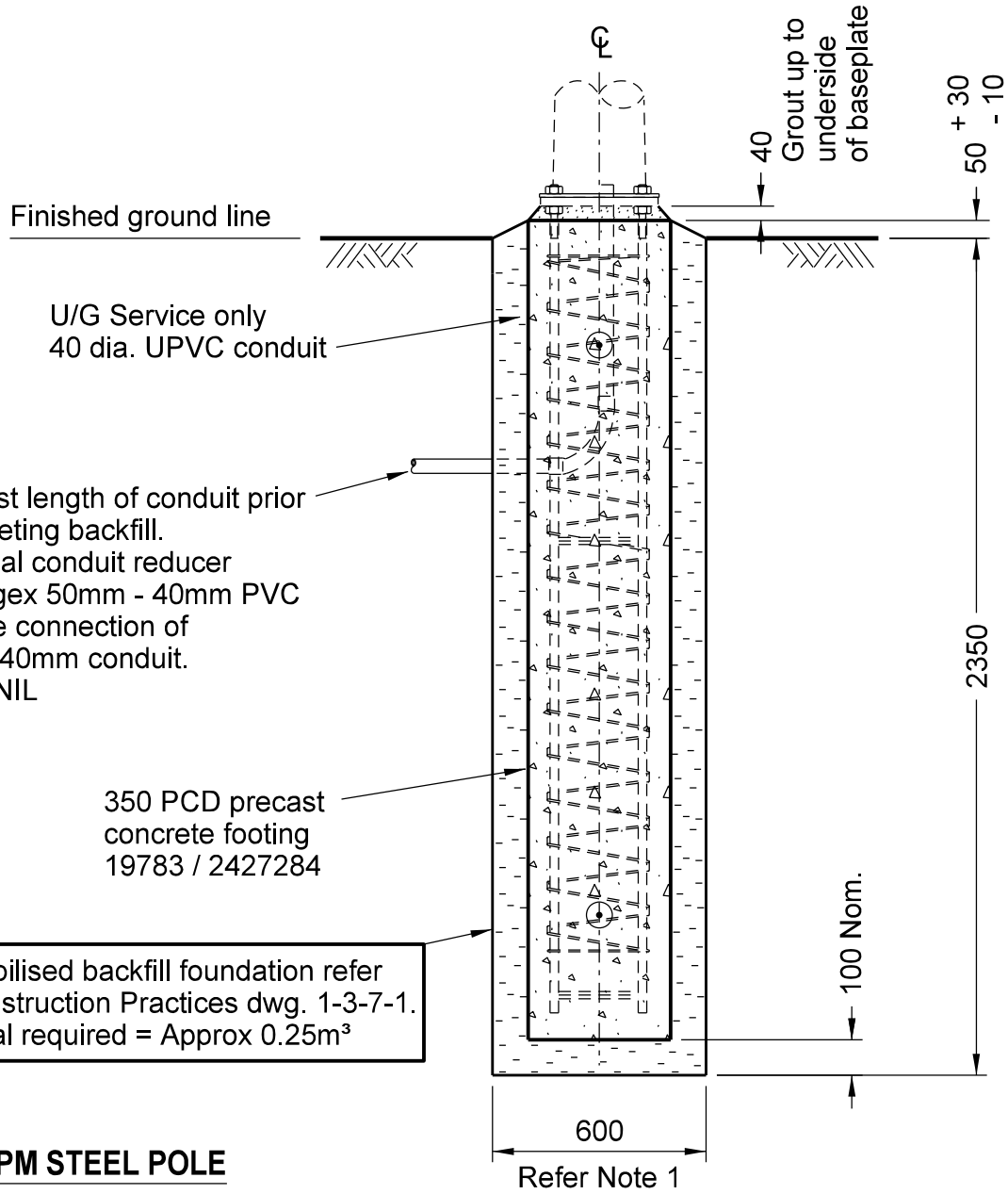

ASSEMBLY 842-2 PRECAST FOUNDATION 350 PCD BPM STEEL POLE

A	ORIGINAL ISSUE	
B	07.01.13	
C	21.10.14	

REFERENCE DRAWING ENERGEX: NIL

REFERENCE DRAWING ERGON: NIL

This document must not be reproduced in part or whole without written permission from ENERGEX or Ergon Energy

energex

© COPYRIGHT 2002 ENERGEX
ENERGEX Corporation Limited
ABN 40 078 849 055

ERGON ENERGY

© COPYRIGHT 2002 ERGON ENERGY
Ergon Energy Corporation Limited
ABN 50 087 646 062

HARD COPY UNCONTROLLED

		Date
Approved Ergon	C. Noel	01/04/16
Approved Energex	F. Zaini	01/04/16
Checked	P. Relf / A. Bletchly	01/04/16
Drawn	L. Burton / T. Borg	01/10/10

LIGHTING
ASSEMBLIES
MAJOR ROAD
PRECAST CONCRETE FOUNDATION 350 PCD

EE DRWG NO: 1-2-842
EGX DRWG NO: 10500-A4-1-2-842

VOLUME	FOLDER	PAGE	ISSUE
1	2	842	0C

MATERIAL

Assy	Description	QTY	ENERGEX SC	ERGON SC
843-3	MINOR ROAD LUMINAIRE S70 NOSTALGIA TYPE 2 GREEN	1 / -	21559	NIL
843-6	MINOR ROAD LUMINAIRE S70 NOSTALGIA TYPE 2 BLACK	1 / -	21560	NIL
843-9	MINOR ROAD LUMINAIRE S70 NOSTALGIA TYPE 2 BLUE / GREY	1 / 1	21561	2433498
843-11	MINOR ROAD LUMINAIRE CF32 NOSTALGIA TYPE 2 GREEN	1 / -	22767	NIL
843-14	MINOR ROAD LUMINAIRE CF32 NOSTALGIA TYPE 2 BLACK	1 / -	22768	NIL
843-17	MINOR ROAD LUMINAIRE CF32 NOSTALGIA TYPE 2 BLUE / GREY	1 / 1	22769	2438224
843-18	MINOR ROAD LUMINAIRE L17 NOSTALGIA TYPE 2 BLUE / GREY	1 / 1	2457737	2457737
843-19	MINOR ROAD LUMINAIRE L25 NOSTALGIA TYPE 2 BLUE / GREY	1 / 1	2457745	2457745
843-20	MINOR ROAD LUMINAIRE L30 NOSTALGIA TYPE 2 BLUE / GREY	1 / 1	2457752	2457752
843-21	MINOR ROAD LUMINAIRE L17 NOSTALGIA TYPE 2 GREEN	1 / -	2462141	NIL
843-22	MINOR ROAD LUMINAIRE L17 NOSTALGIA TYPE 2 BLACK	1 / -	2462158	NIL
843-23	MINOR ROAD LUMINAIRE L25 NOSTALGIA TYPE 2 GREEN	1 / -	2462166	NIL
843-24	MINOR ROAD LUMINAIRE L25 NOSTALGIA TYPE 2 BLACK	1 / -	2462174	NIL
843-25	MINOR ROAD LUMINAIRE L30 NOSTALGIA TYPE 2 GREEN	1 / -	2462182	2462182
843-26	MINOR ROAD LUMINAIRE L30 NOSTALGIA TYPE 2 BLACK	1 / -	2462190	2462190

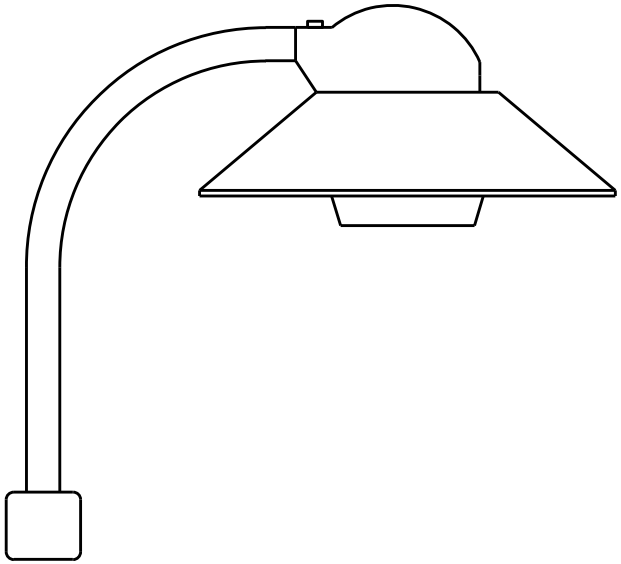

Notes

1. Luminaires are supplied complete with lamp and PE cell fitted.
2. PE Cell assembly 901 and lamp assembly 902-1 & 902-14 are provided for maintenance spares.
3. LED luminaires, assembly 843-18 - 20, use NEMA, High Rating PE cell (Assy 901-2).

A	ORIGINAL ISSUE	
C	04.02.14	
D	05.01.16	
E	21.12.16	
F	26.06.19	

REFERENCE DRAWING ENERGEX: 4927-A4-6.8,6.9

REFERENCE DRAWING ERGON: 5 82 8016 1

This document must not be reproduced in part or whole without written permission from ENERGEX or Ergon Energy

energex

© COPYRIGHT 2019 ENERGEX
ENERGEX Corporation Limited
ABN 40 078 849 055

ERGON ENERGY

© COPYRIGHT 2019 ERGON ENERGY
Ergon Energy Corporation Limited
ABN 50 087 646 062

HARD COPY UNCONTROLLED

		Date
Approved Ergon	A. Bletchly	09/08/19
Approved Energex	A. Bletchly	09/08/19
Checked	K. Slater	09/08/19
Drawn	L. Burton / T. Borg	01/10/10

LIGHTING

ASSEMBLIES
MINOR ROAD NOSTALGIA TYPE 2 LUMINAIRE
GREEN, BLACK & BLUE / GREY

EE DRWG NO: 1-2-843
EGX DRWG NO: 10500-A4-1-2-843

VOLUME	FOLDER	PAGE	ISSUE
1	2	843	0F

MATERIAL

ENERGEX SC	QTY			ERGON SC
	844-2	844-4	844-6	
17231	1 / -			NIL
17870		1 / -		NIL
17871			1 / -	NIL

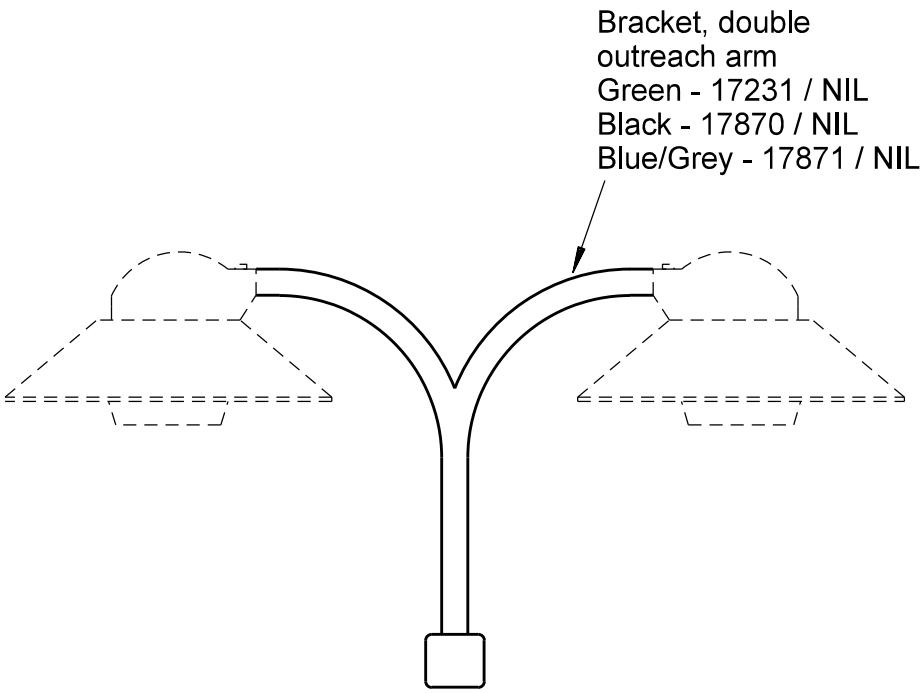

ASSEMBLY 844-2 MINOR ROAD BRACKET DOUBLE ARM OUTREACH GREEN

ASSEMBLY 844-4 MINOR ROAD BRACKET DOUBLE ARM OUTREACH BLACK

ASSEMBLY 844-6 MINOR ROAD BRACKET DOUBLE ARM OUTREACH BLUE/GREY

A	ORIGINAL ISSUE	
B	22.03.18	

REFERENCE DRAWING ENERGEX: 4927-A4-6.9

REFERENCE DRAWING ERGON: NIL

This document must not be reproduced in part or whole without written permission from ENERGEX or Ergon Energy

energex

© COPYRIGHT 2002 ENERGEX
ENERGEX Corporation Limited
ABN 40 078 849 055

ERGON ENERGY

© COPYRIGHT 2002 ERGON ENERGY
Ergon Energy Corporation Limited
ABN 50 087 646 062

HARD COPY UNCONTROLLED

Approved Ergon	C. Noel	01/05/18
Approved Energex	F. Zaini	01/05/18
Checked	A. Bletchly / P. Relf	01/05/18
Drawn	L. Burton / T. Borg	01/10/10

LIGHTING

ASSEMBLIES - ENERGEX ONLY
MINOR ROAD BRACKET DOUBLE OUTREACH ARM
GREEN, BLACK & BLUE / GREY

EE DRWG NO: 1-2-844
EGX DRWG NO: 10500-A4-1-2-844

VOLUME	FOLDER	PAGE	ISSUE
1	2	844	0B

MATERIAL

ENERGEX SC	QTY 845-1	ERGON SC
22425	1 / 1	2434223
00684	6 / 6	1757894
17119	AR	1420068

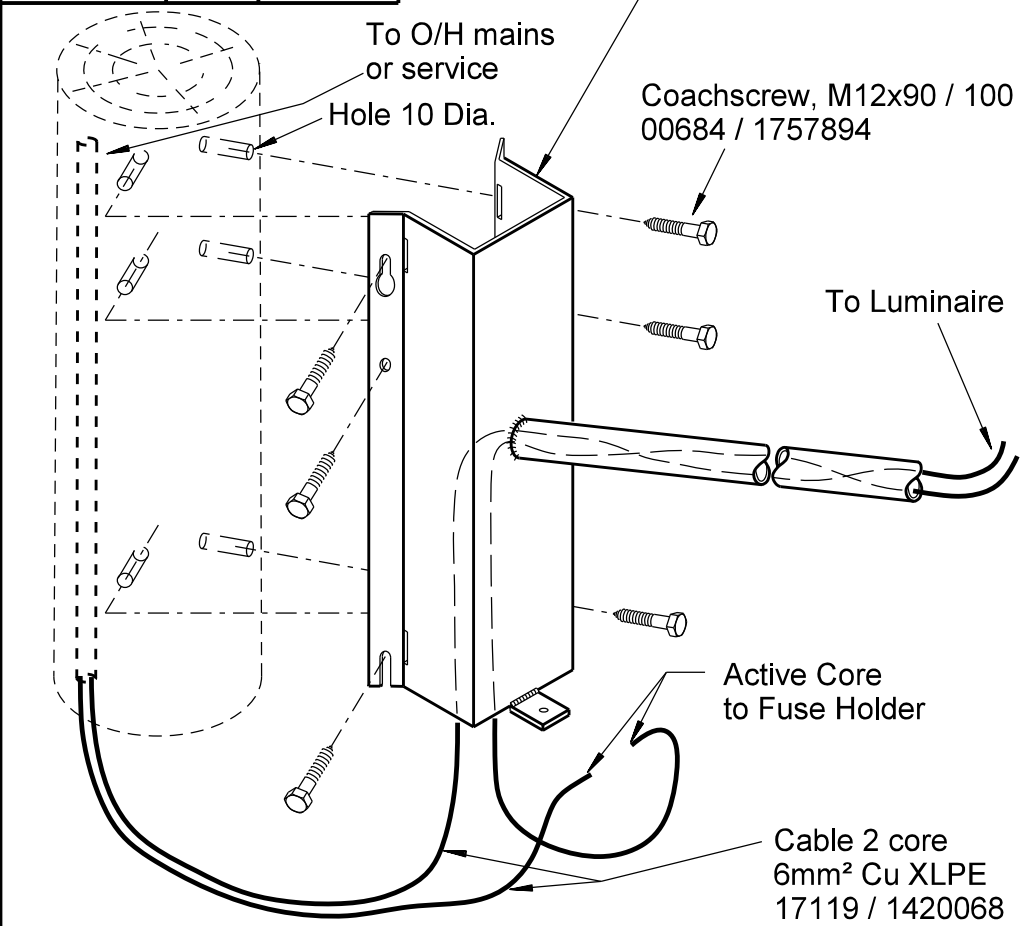

ASSEMBLY 845-1 MINOR ROAD BRACKET MI3 & CABLE MOUNTING TO WOOD POLE

MATERIAL

ENERGEX SC	QTY 845-2	ERGON SC
22425	1 / 1	2434223
17119	AR	1420068
02476	5m	0406297
02483	2 / 2	0406311

ONLY TO BE USED IN NON-CYCLONIC AREAS

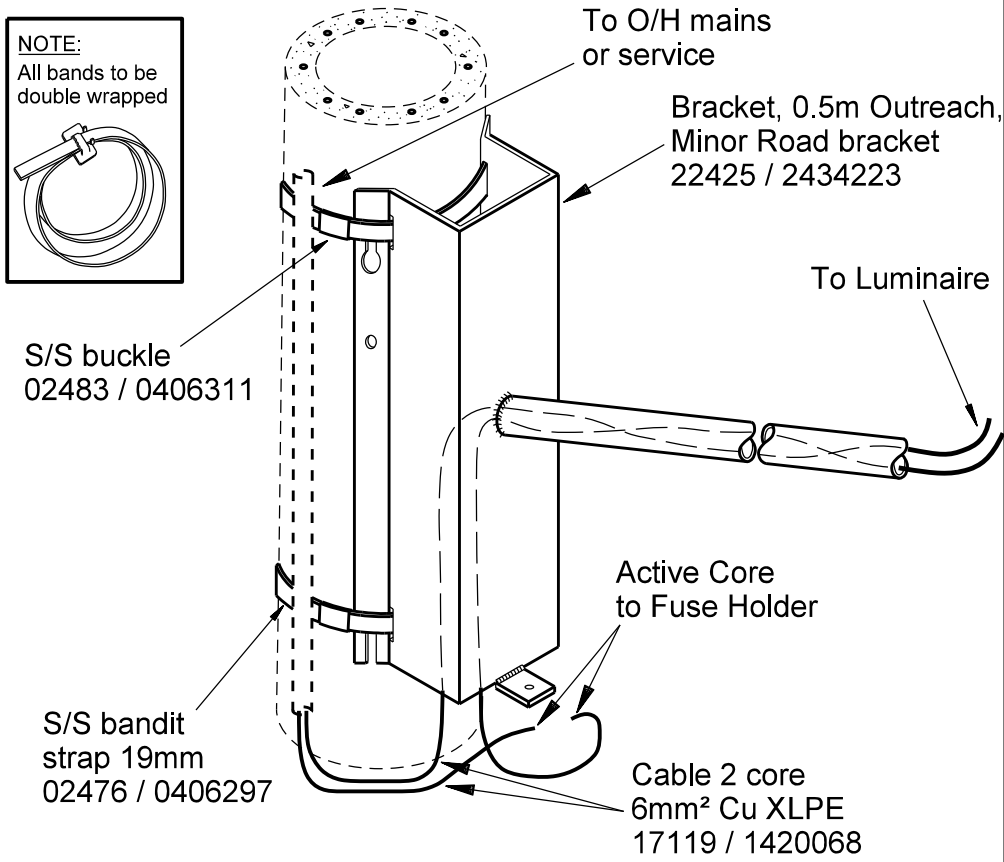

ASSEMBLY 845-2 MINOR ROAD BRACKET MI3 & CABLE MOUNTING TO CONCRETE POLE

A	ORIGINAL ISSUE	
B	22.03.18	
C	27.09.18	

REFERENCE DRAWING ENERGEX: 4927-A4-3.1,3.2,4.5

REFERENCE DRAWING ERGON: NIL

This document must not be reproduced in part or whole without written permission from ENERGEX or Ergon Energy

energex

© COPYRIGHT 2019 ENERGEX
ENERGEX Corporation Limited
ABN 40 078 849 055

ERGON ENERGY

© COPYRIGHT 2019 ERGON ENERGY
Ergon Energy Corporation Limited
ABN 50 087 646 062

HARD COPY UNCONTROLLED

Approved Ergon	A. Bletchly	01/03/19
Approved Energex	A. Bletchly	01/03/19
Checked	K. Slater	01/03/19
Drawn	L. Burton / T. Borg	01/10/10

LIGHTING
ASSEMBLIES
MINOR ROAD STREETLIGHT BRACKETS
MI3 0.5m OUTREACH MOUNTING TO POLE

EE DRWG NO: 1-2-845
EGX DRWG NO: 10500-A4-1-2-845

VOLUME	FOLDER	PAGE	ISSUE
1	2	845	0C

MATERIAL

ENERGEX SC	QTY 846-1	ERGON SC
2427300	1 / 1	2427300

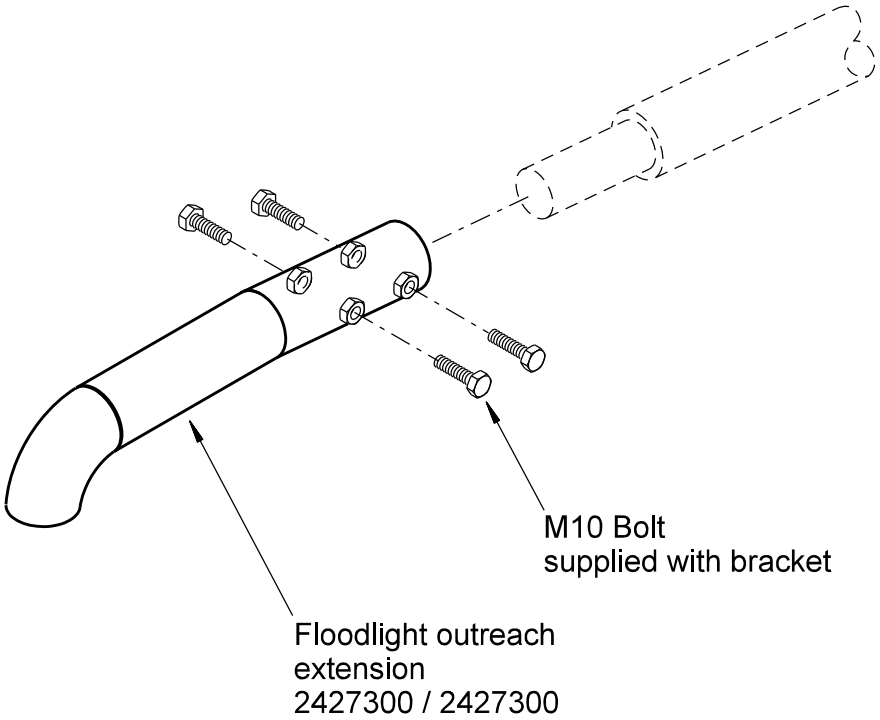

ASSEMBLY 846-1 MAJOR ROAD PEDESTRIAN FLOODLIGHT OUTREACH EXTENSION

A	ORIGINAL ISSUE	REFERENCE DRAWING ENERGEX 4927-A4-4.6	energex	ERGON ENERGY	Approved Ergon A. Bletchly 01/03/19	**LIGHTING** ASSEMBLIES MAJOR ROAD POLE BRACKETS PEDESTRIAN CROSSING FLOODLIGHT OUTREACH EXTENSION
B	04.09.18	REFERENCE DRAWING ERGON NIL			Approved Energex A. Bletchly 01/03/19	
					Checked K. Slater 01/03/19	
					Drawn L. Burton / T. Borg 01/10/10	

This document must not be reproduced in part or whole without written permission from ENERGEX or Ergon Energy

© COPYRIGHT 2019 ENERGEX
ENERGEX Corporation Limited
ABN 40 078 849 055

© COPYRIGHT 2019 ERGON ENERGY
Ergon Energy Corporation Limited
ABN 50 087 646 062

HARD COPY UNCONTROLLED

EE DRWG NO: 1-2-846	VOLUME	FOLDER	PAGE	ISSUE
EGX DRWG NO: 10500-A4-1-2-846	1	2	846	0B

MATERIAL

ENERGEX SC	QTY 847-1	QTY 847-3	ERGON SC
22424	1 / 1	1 / 1	2433712
13166		1 / 1	1104726
04434	1 / 1	1 / 1	0124002
19910	1 / 1	1 / 1	0141106
08536	3 / 3	3 / 3	2400076
00983	3 / 3	3 / 3	2400093
01147	3 / 3	3 / 3	2406978
00688	2 / 2	2 / 2	1758076
16023	AR	AR	2434488
17119	AR	AR	1420068
11430	AR	AR	0104435
04929	AR	AR	2173040
04838	AR	AR	2113005

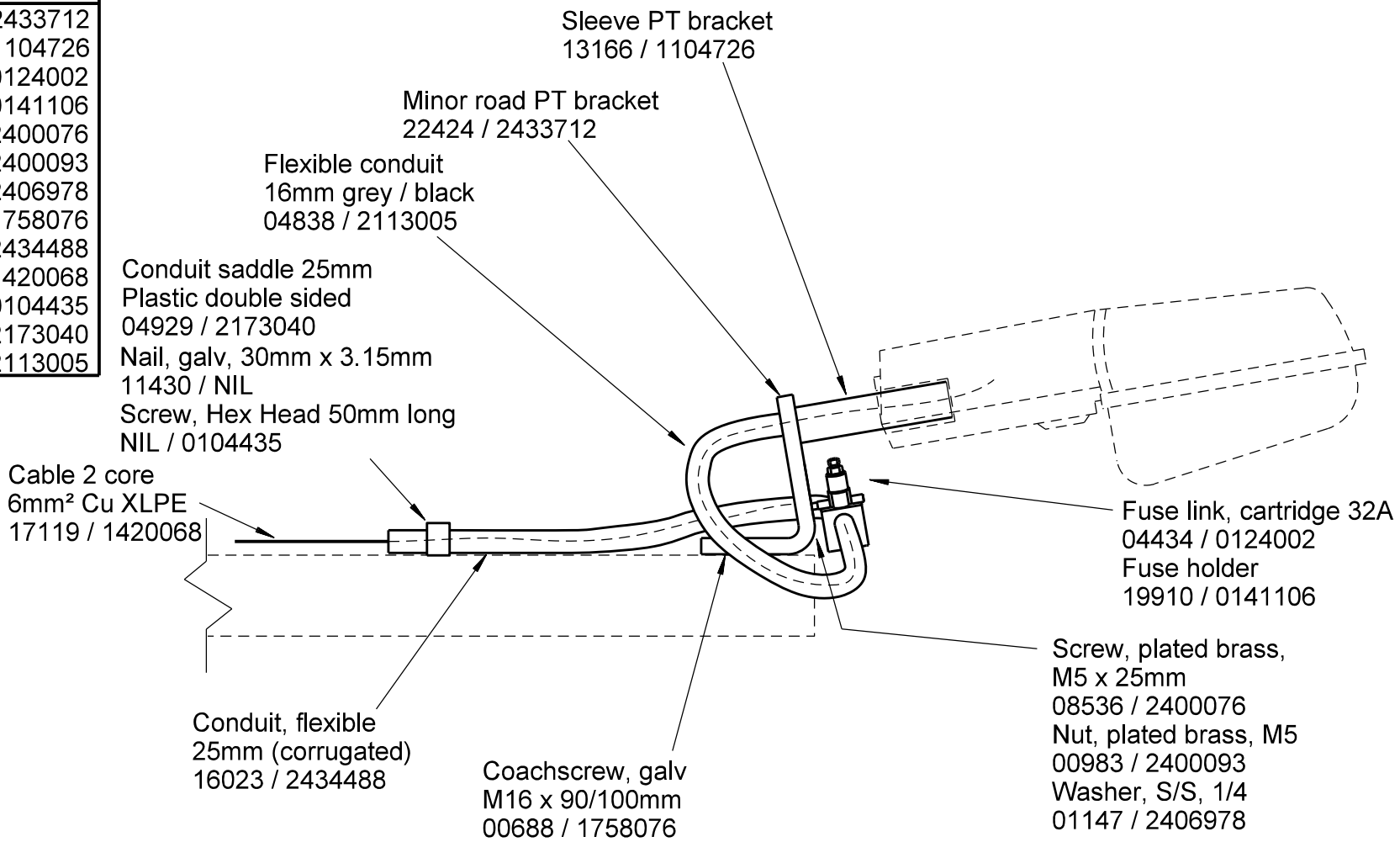

ASSEMBLY 847-1 BRACKET PT & CABLE MOUNTING TO WOOD CROSSARM MINOR ROAD

ASSEMBLY 847-3 BRACKET PT & CABLE MOUNTING TO WOOD CROSSARM MAJOR ROAD

A	ORIGINAL ISSUE	
B	20.03.14	
C	30.07.14	
D	27.10.16	

REFERENCE DRAWING ENERGEX: 4927-A4-3.1

REFERENCE DRAWING ERGON: NIL

This document must not be reproduced in part or whole without written permission from ENERGEX or Ergon Energy

energex

© COPYRIGHT 2002 ENERGEX
ENERGEX Corporation Limited
ABN 40 078 849 055

ERGON ENERGY

© COPYRIGHT 2002 ERGON ENERGY
Ergon Energy Corporation Limited
ABN 50 087 646 062

HARD COPY UNCONTROLLED

		Date
Approved Ergon	C. Noel	19/04/17
Approved Energex	F. Zaini	19/04/17
Checked	P. Relf / A. Bletchly	01/04/17
Drawn	L. Burton / T. Borg	01/10/10

LIGHTING

ASSEMBLIES
MAJOR & MINOR ROAD
0.3m POWER TRANSFORMER OUTREACH

EE DRWG NO: 1-2-847
EGX DRWG NO: 10500-A4-1-2-847

VOLUME	FOLDER	PAGE	ISSUE
1	2	847	0D

MATERIAL

ENERGEX SC	QTY 851-1	QTY 851-2	ERGON SC
16823	1 / 1		2403719
13940		1 / 1	2403720
03293	AR	AR	NIL
06490	6 / -	6 / -	NIL
07112	AR	AR	NIL
12175	AR	AR	NIL

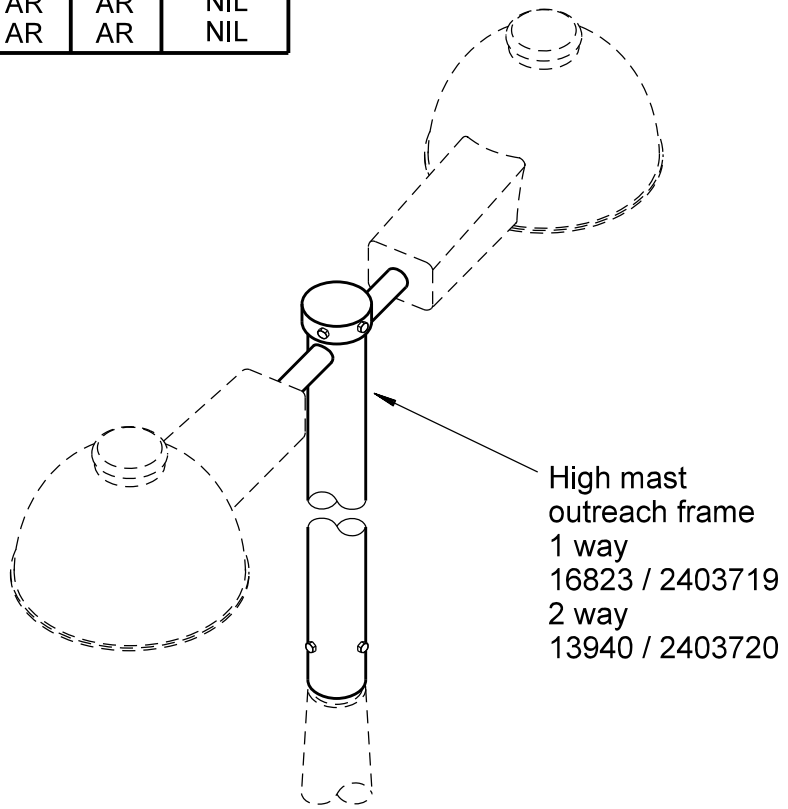

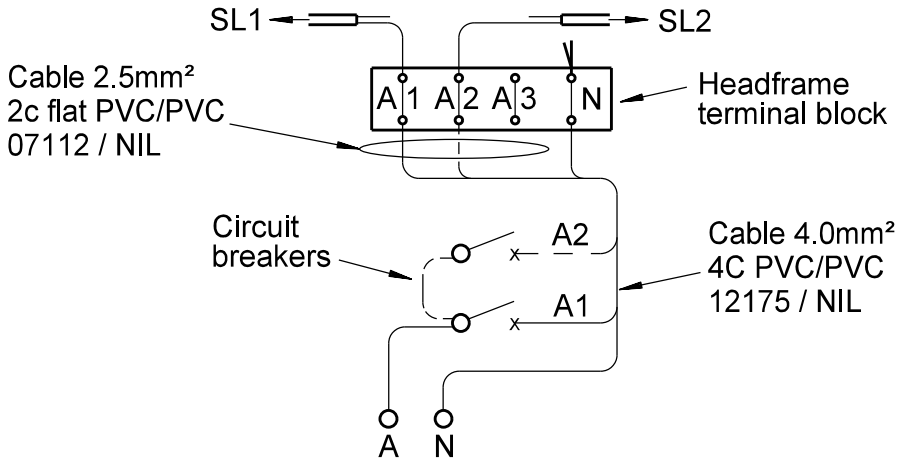

CONNECTION DIAGRAM

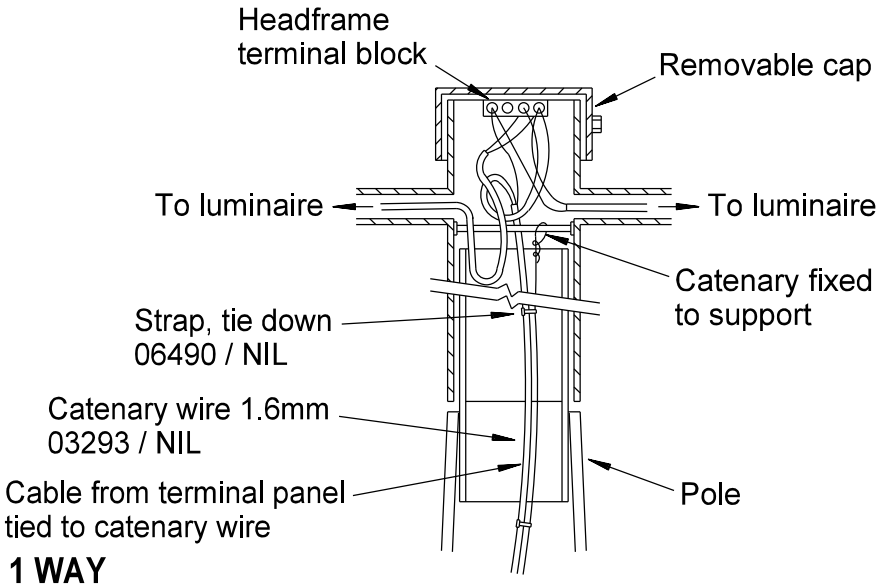

HEADFRAME SECTIONAL DETAIL

ASSEMBLY 851-1 MAJOR ROAD HIGH MAST OUTREACH FRAME - 1 WAY

ASSEMBLY 851-2 MAJOR ROAD HIGH MAST OUTREACH FRAME - 2 WAY

A	ORIGINAL ISSUE
B	28.10.16
C	22.03.18

REFERENCE DRAWING ENERGEX: 4927-A4-8.2

REFERENCE DRAWING ERGON: NIL

This document must not be reproduced in part or whole without written permission from ENERGEX or Ergon Energy

energex

© COPYRIGHT 2002 ENERGEX
ENERGEX Corporation Limited
ABN 40 078 849 055

ERGON ENERGY

© COPYRIGHT 2002 ERGON ENERGY
Ergon Energy Corporation Limited
ABN 50 087 646 062

HARD COPY UNCONTROLLED

Approved Ergon	C. Noel	01/05/18
Approved Energex	F. Zaini	01/05/18
Checked	P. Relf / A. Bletchly	01/05/18
Drawn	L. Burton / T. Borg	01/10/10

LIGHTING
ASSEMBLIES
HIGH MAST OUTREACH FRAME - 1 & 2 WAY

EE DRWG NO: 1-2-851
EGX DRWG NO: 10500-A4-1-2-851

VOLUME	FOLDER	PAGE	ISSUE
1	2	851	0C

MATERIAL

ENERGEX SC	QTY 852-1	QTY 852-2	ERGON SC
05390	1 / 1		2403721
05389		1 / 1	2403722
03293	AR	AR	NIL
06490	6 / -	6 / -	NIL
07112	AR	AR	NIL
12175	AR	AR	NIL

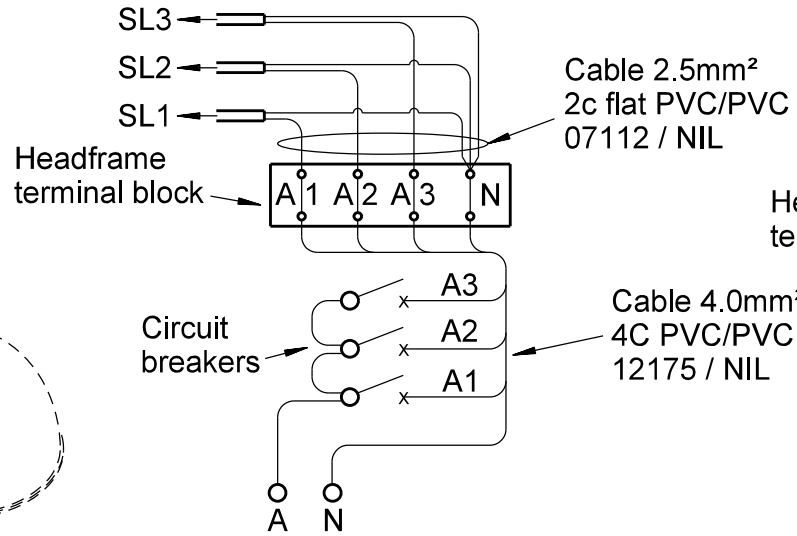

CONNECTION DIAGRAM 3 WAY

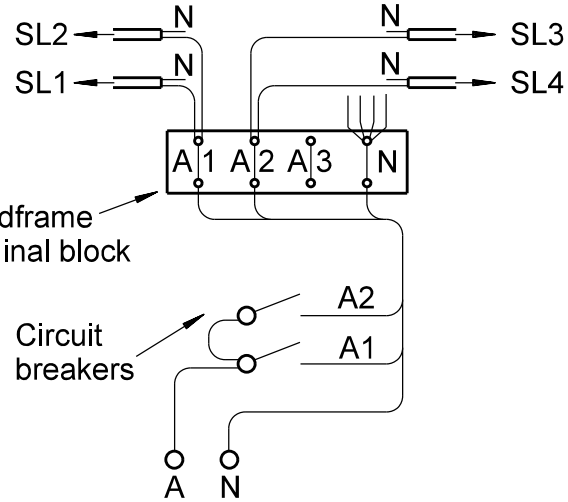

CONNECTION DIAGRAM 4 WAY

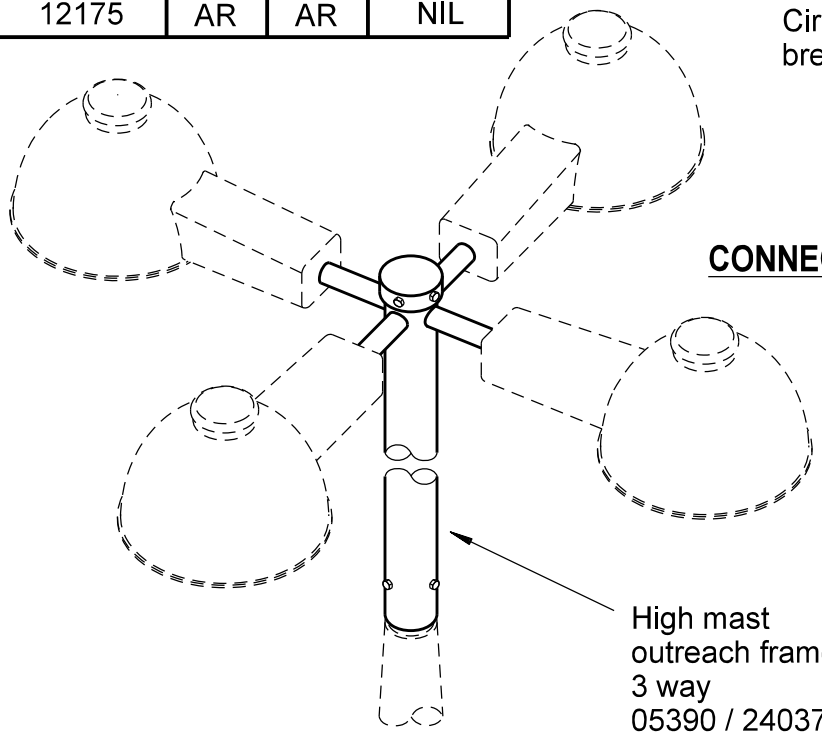

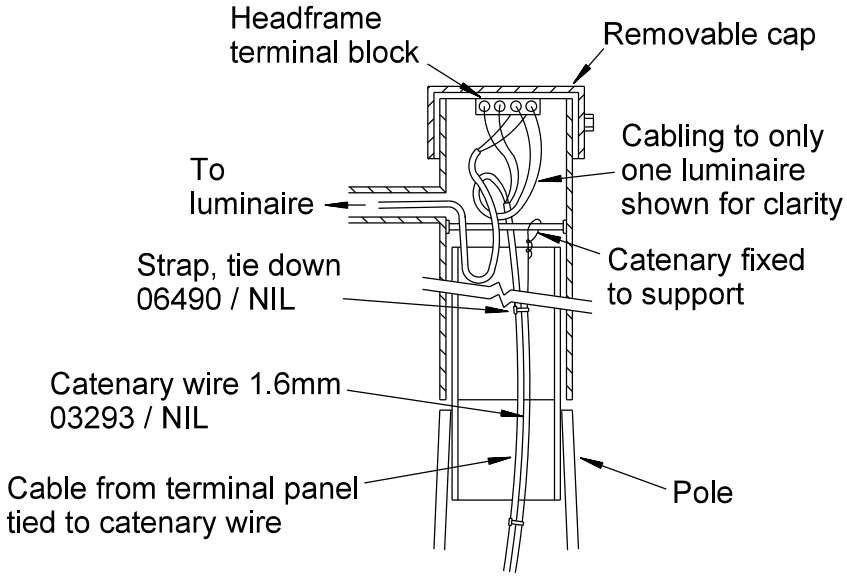

HEADFRAME SECTIONAL DETAIL 3 & 4 WAY

ASSEMBLY 852-1 MAJOR ROAD HIGH MAST OUTREACH FRAME - 3 WAY

ASSEMBLY 852-2 MAJOR ROAD HIGH MAST OUTREACH FRAME - 4 WAY

A	ORIGINAL ISSUE	REFERENCE DRAWING ENERGEX: 4927-A4-8.3,8.4	energex	Approved Ergon: C. Noel	Date: 01/05/18
B	28.10.16	REFERENCE DRAWING ERGON: NIL		Approved Energex: F. Zaini	Date: 01/05/18
C	22.03.18			Checked: P. Relf / A. Bletchly	Date: 01/05/18
				Drawn: L. Burton / T. Borg	Date: 01/10/10

© COPYRIGHT 2002 ENERGEX
ENERGEX Corporation Limited
ABN 40 078 849 055

© COPYRIGHT 2002 ERGON ENERGY
Ergon Energy Corporation Limited
ABN 50 087 646 062

This document must not be reproduced in part or whole without written permission from ENERGEX or Ergon Energy

HARD COPY UNCONTROLLED

LIGHTING
ASSEMBLIES
HIGH MAST OUTREACH FRAMES - 3 & 4 WAY

EE DRWG NO: 1-2-852	VOLUME	FOLDER	PAGE	ISSUE
EGX DRWG NO: 10500-A4-1-2-852	1	2	852	0C

MATERIAL

ENERGEX SC	QTY 853-1	QTY 853-2	QTY 853-3	ERGON SC
21590	1 / -			NIL
21591		1 / -		2403268
21592			1 / -	2403254
05268	1 / -			NIL
05270		1 / -		1141599
05273			1 / -	1141639
05502	1 / -	1 / -	1 / -	1184026

High Mast Luminaire
S150
21590 / NIL
S250
21591 / 2403268
S400
21592 / 2403254

PE Cell
NEMA, High rating
05502 / 1184026

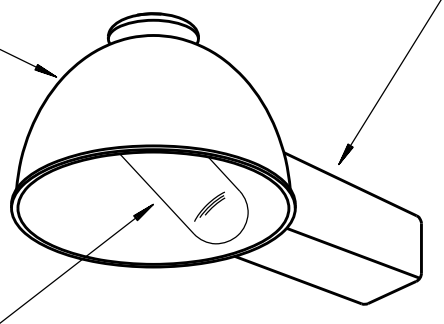

Clear Lamp
S150
05268 / NIL
S250
05270 / 1141599
S400
05273 / 1141639

ASSEMBLY 853-1 MAJOR ROAD HIGH MAST LUMINAIRE S150

ASSEMBLY 853-2 MAJOR ROAD HIGH MAST LUMINAIRE S250

ASSEMBLY 853-3 MAJOR ROAD HIGH MAST LUMINAIRE S400

MATERIAL

ENERGEX SC	QTY 853-4	QTY 853-5	QTY 853-6	ERGON SC
2467124	1 / 1			2467124
2467132		1 / 1		2467132
2467140			1 / 1	2467140

LED Luminaire
High Mast
100W
2467124
175W
2467132
300W
2467140

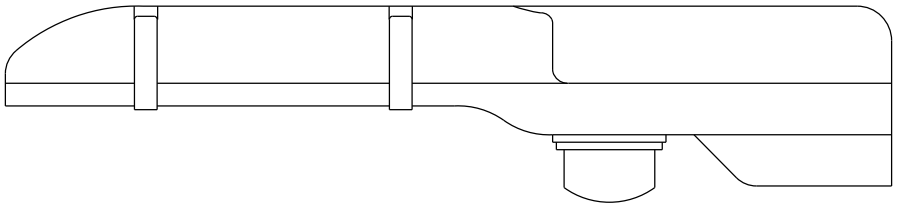

ASSEMBLY 853-4 MAJOR ROAD HIGH MAST LED LUMINAIRE 100W

ASSEMBLY 853-5 MAJOR ROAD HIGH MAST LED LUMINAIRE 175W

ASSEMBLY 853-6 MAJOR ROAD HIGH MAST LED LUMINAIRE 300W

A	ORIGINAL ISSUE	
B	27.02.13	
C	31.10.16	
D	03.04.18	

REFERENCE DRAWING ENERGEX: NIL

REFERENCE DRAWING ERGON: NIL

This document must not be reproduced in part or whole without written permission from ENERGEX or Ergon Energy

energex

© COPYRIGHT 2002 ENERGEX
ENERGEX Corporation Limited
ABN 40 078 849 055

ERGON ENERGY

© COPYRIGHT 2002 ERGON ENERGY
Ergon Energy Corporation Limited
ABN 50 087 646 062

HARD COPY UNCONTROLLED

		Date
Approved Ergon	C. Noel	01/05/18
Approved Energex	F. Zaini	01/05/18
Checked	P. Relf / A. Bletchly	01/05/18
Drawn	L. Burton / T. Borg	01/10/10

LIGHTING
ASSEMBLIES
HIGH MAST LUMINAIRE LAMP & PE CELL

EE DRWG NO: 1-2-853
EGX DRWG NO: 10500-A4-1-2-853

VOLUME	FOLDER	PAGE	ISSUE
1	2	853	0D

MATERIAL

ENERGEX SC	QTY		ERGON SC
	854-1	854-3	
16889	1 / -		NIL
16890		1 / -	NIL

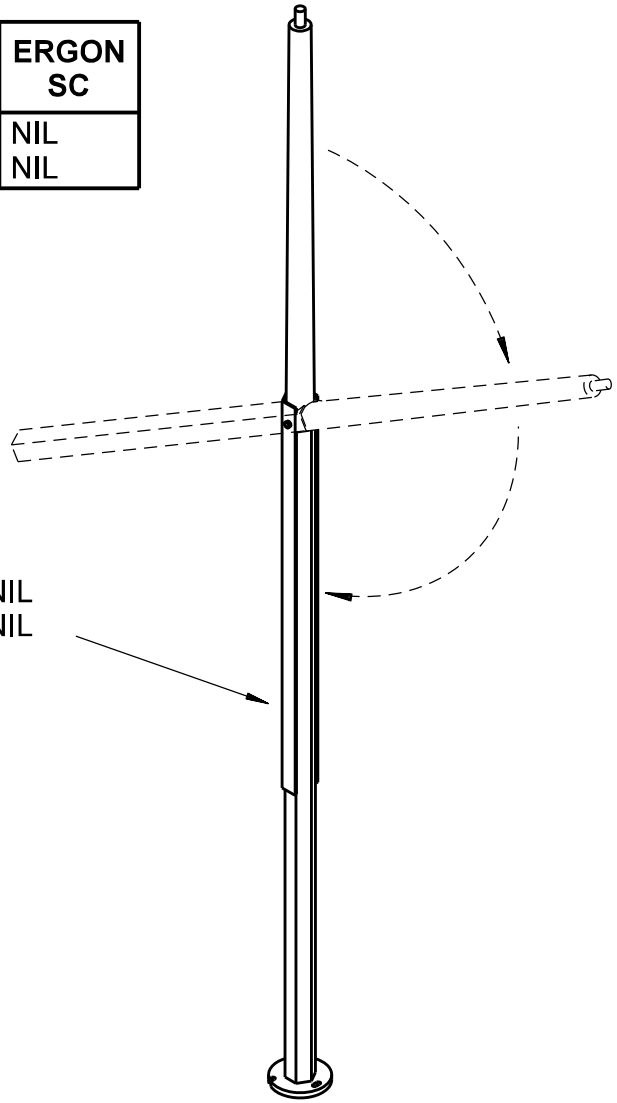

ASSEMBLY 854-1 MAJOR ROAD MID HINGED BPM STEEL POLE 10.0m

ASSEMBLY 854-3 MAJOR ROAD MID HINGED BPM STEEL POLE 13.0m

MATERIAL

ENERGEX SC	QTY				ERGON SC
	854-10	854-11	854-20	854-21	
2462208	1 / -				NIL
2462216		1 / -			NIL
2462224			1 / -		NIL
2462232				1 / -	NIL

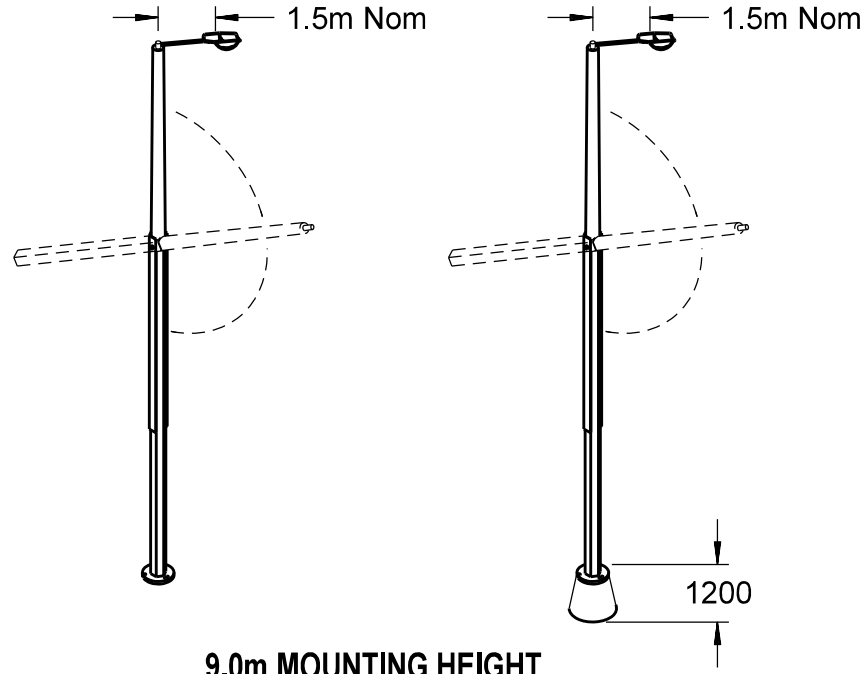

ASSEMBLY 854-10 9.0m MOUNTING HEIGHT BPM HINGED POLE C/W 1.5M OUTREACH

ASSEMBLY 854-11 9.0m MOUNTING HEIGHT BPM HINGED POLE FOR MOUNTING ON 1.2M BARRIER C/W 1.5M OUTREACH

ASSEMBLY 854-20 10.5m MOUNTING HEIGHT BPM HINGED POLE C/W 1.5M OUTREACH

ASSEMBLY 854-21 10.5m MOUNTING HEIGHT BPM HINGED POLE FOR MOUNTING ON 1.2M BARRIER C/W 1.5M OUTREACH

A	ORIGINAL ISSUE	REFERENCE DRAWING ENERGEX: 4927-A4-2.42	energex	ERGON ENERGY	Approved Ergon: C. Noel — Date: 19/04/17
B	22.03.17	REFERENCE DRAWING ERGON: NIL	© COPYRIGHT 2002 ENERGEX ENERGEX Corporation Limited ABN 40 078 849 055	©COPYRIGHT 2002 ERGON ENERGY Ergon Energy Corporation Limited ABN 50 087 646 062	Approved Energex: F. Zaini — Date: 19/04/17
		This document must not be reproduced in part or whole without written permission from ENERGEX or Ergon Energy	HARD COPY UNCONTROLLED		Checked: P. Relf / A. Bletchly — Date: 01/04/17
					Drawn: L. Burton / T. Borg — Date: 01/10/10

LIGHTING
ASSEMBLIES - ENERGEX ONLY
MAJOR ROAD BPM MID HINGED POLE

EE DRWG NO: 1-2-854	VOLUME	FOLDER	PAGE	ISSUE
EGX DRWG NO: 10500-A4-1-2-854	1	2	854	0B

MATERIAL

ENERGEX SC	QTY 855-1	QTY 855-2	ERGON SC
22399	1 / 1		2433670
22400		1 / 1	2433688
20286	1 / -	1 / -	NIL

NOTES:

1. Use nearest oversize auger.
2. Orientate hold down bolts in footing with the 2 bolts nearest road, parallel to road.
3. Assy 855-2 for use with 5.5m pole & 2m double outreach (Total 7.5m hgt).
4. Holes to be filled within 48 hours of excavation.
5. Suitable for most soils other than :-
   (i) Loose sand (commonly occuring in sand dunes)
   (ii) Swampy silt deposits (commonly occuring in swamps, coastal salt pans & mud flats)
   (iii) Loose, uncompacted fill material
   (iv) Clays with shear strength less than 50kPa
   Seek structural engineers advice on foundation design for unsuitable soils.
6. Locate conduit on side of foundation to suit direction of incoming conduit

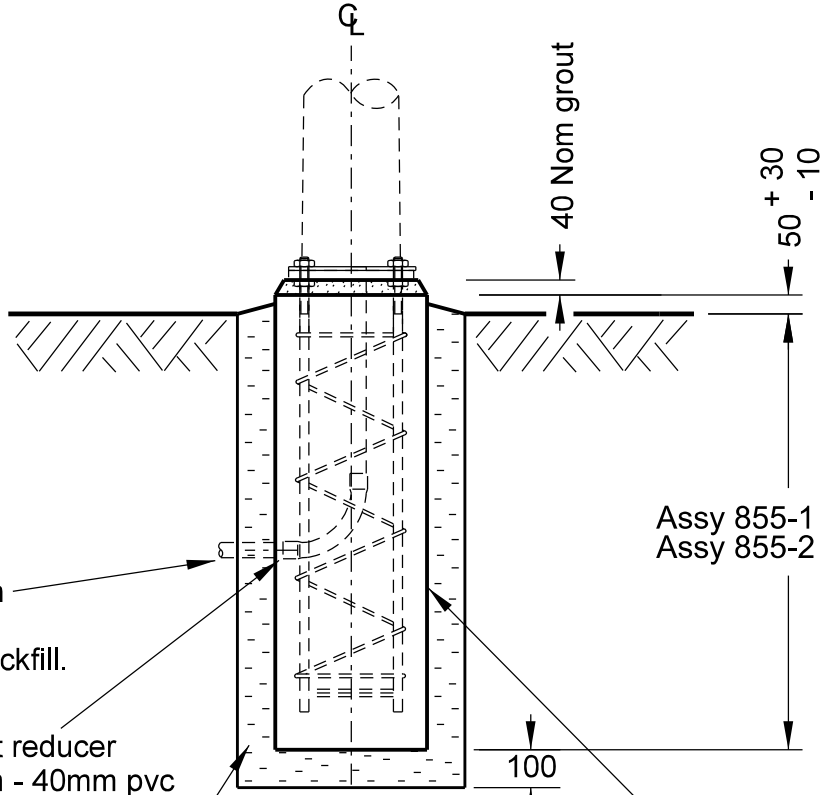

Install first length of conduit prior to completing backfill.

Fit internal conduit reducer for Energex 50mm - 40mm pvc to enable connection of external 40mm conduit.
20286 / NIL

Stabilised backfill foundation refer Construction Practices dwg 1-3-7-1
Total required = Approx. 0.15m³ (1200)
0.19m³ (1500)

BPM steel pole precast concrete foundation.
Depth 1.2 metres
22399 / 2433670
or
Depth 1.5 metres
22400 / 2433688

ASSEMBLY 855-1 **MINOR ROAD FOUNDATION PRECAST CONCRETE DEPTH 1.2m**

ASSEMBLY 855-2 **MINOR ROAD FOUNDATION PRECAST CONCRETE DEPTH 1.5m**

A	ORIGINAL ISSUE	
B	29.11.13	
C	22.10.14	

REFERENCE DRAWING ENERGEX: NIL

REFERENCE DRAWING ERGON: 5 82 8020 1

This document must not be reproduced in part or whole without written permission from ENERGEX or Ergon Energy

energex

© COPYRIGHT 2002 ENERGEX
ENERGEX Corporation Limited
ABN 40 078 849 055

ERGON ENERGY

© COPYRIGHT 2002 ERGON ENERGY
Ergon Energy Corporation Limited
ABN 50 087 646 062

HARD COPY UNCONTROLLED

		Date
Approved Ergon	C. Noel	01/04/16
Approved Energex	F. Zaini	01/04/16
Checked	P. Relf / A. Bletchly	01/04/16
Drawn	L. Burton / T. Borg	01/10/10

LIGHTING
ASSEMBLIES
MINOR ROAD
PRECAST CONCRETE FOUNDATION

EE DRWG NO: 1-2-855
EGX DRWG NO: 10500-A4-1-2-855

VOLUME	FOLDER	PAGE	ISSUE
1	2	855	0C

MATERIAL

ENERGEX SC	QTY 856-1	ERGON SC
16432	1 / 1	2433795
02476	1 / 1	0406297
02483	1 / 1	0406311

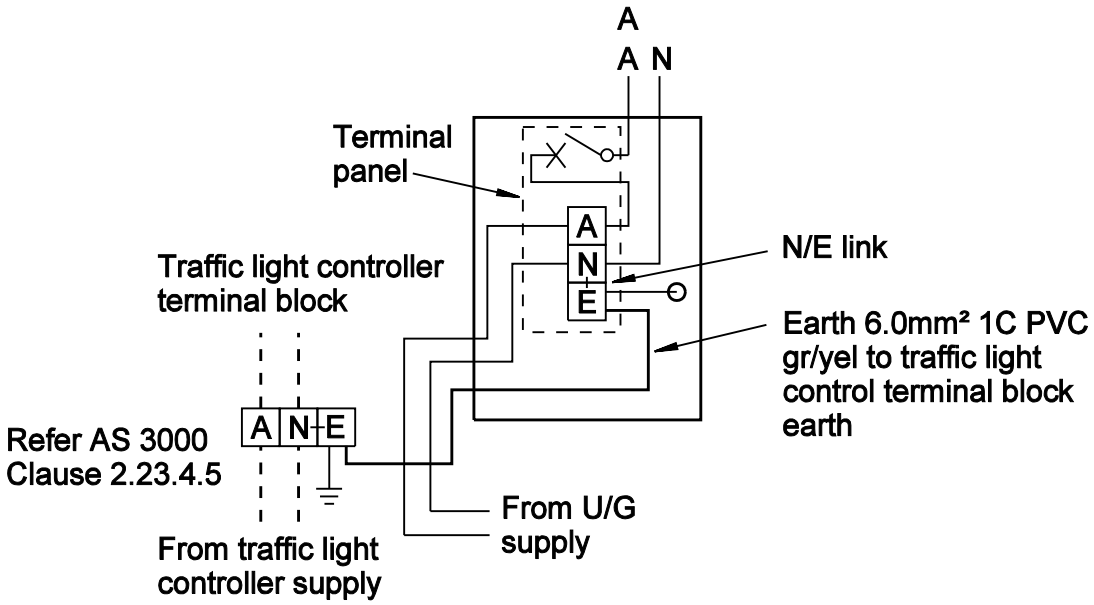

WIRING DIAGRAM

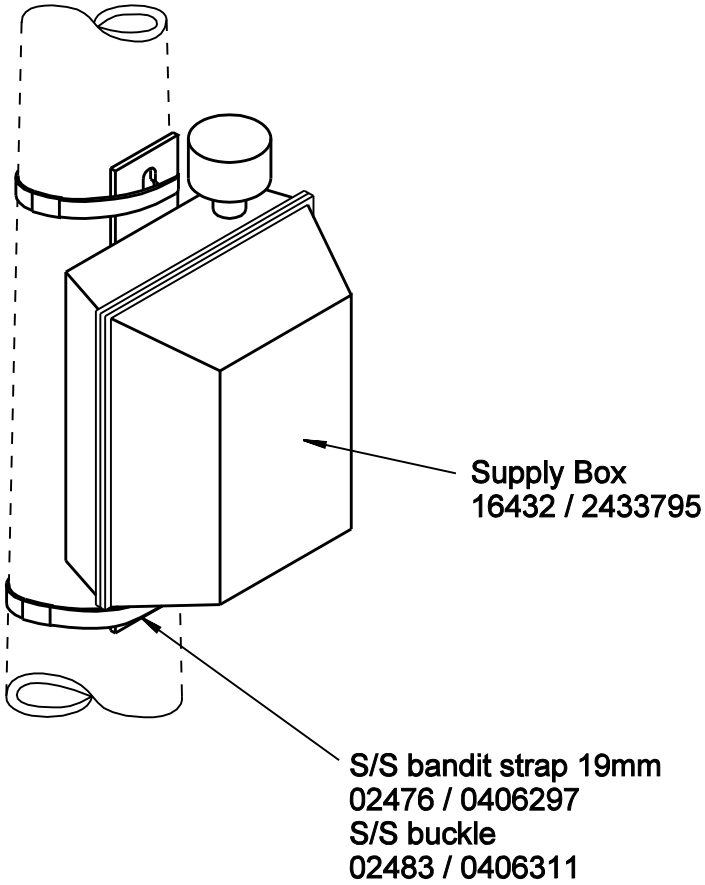

ASSEMBLY 856-1 JOINT USE STREETLIGHT SUPPLY BOX

A	ORIGINAL ISSUE	REFERENCE DRAWING ENERGEX: 4927-A4-7.5	energex	ERGON. ENERGY	Approved Ergon: J. Brooks — Date: 14/10/10	**LIGHTING** ASSEMBLIES JOINT USE TRAFFIC LIGHT - U/G SUPPLY STREETLIGHT SUPPLY BOX
		REFERENCE DRAWING ERGON: NIL			Approved Energex: R. English — Date: 14/10/10	
			© COPYRIGHT 2002 ENERGEX ENERGEX Corporation Limited ABN 40 078 849 055	© COPYRIGHT 2002 ERGON ENERGY Ergon Energy Corporation Limited ABN 50 087 646 062	Checked: D. Taylor / B. Oyegoke — Date: 14/10/10	
		This document must not be reproduced in part or whole without written permission from ENERGEX or Ergon Energy	HARD COPY UNCONTROLLED		Drawn: L. Burton / T. Borg — Date: 01/10/10	EE DRWG NO: 1-2-856 / EGX DRWG NO: 10500-A4-1-2-856

VOLUME	FOLDER	PAGE	ISSUE
1	2	856	0A

MATERIAL

ENERGEX SC	QTY			ERGON SC
	857-1	857-2	857-3	
Nil	AR	AR	AR	0184880
2466050	1 / 1	1 / 1	1 / 1	2466050
07112	6m	9m	18m	2403244
Nil	- / 1	- / 1	- / 1	2427359

NOTES:

1. To provide a permanent earth attachment to pole assemble lug, 1 flat washer, 1 spring washer, 1 nut and 1 flat washer under terminal panel.
2. Provide approximately 100mm of excess service cable. Loop in pole.
3. Terminal blocks provided as part of terminal panel suitable for max. 6mm² cable.

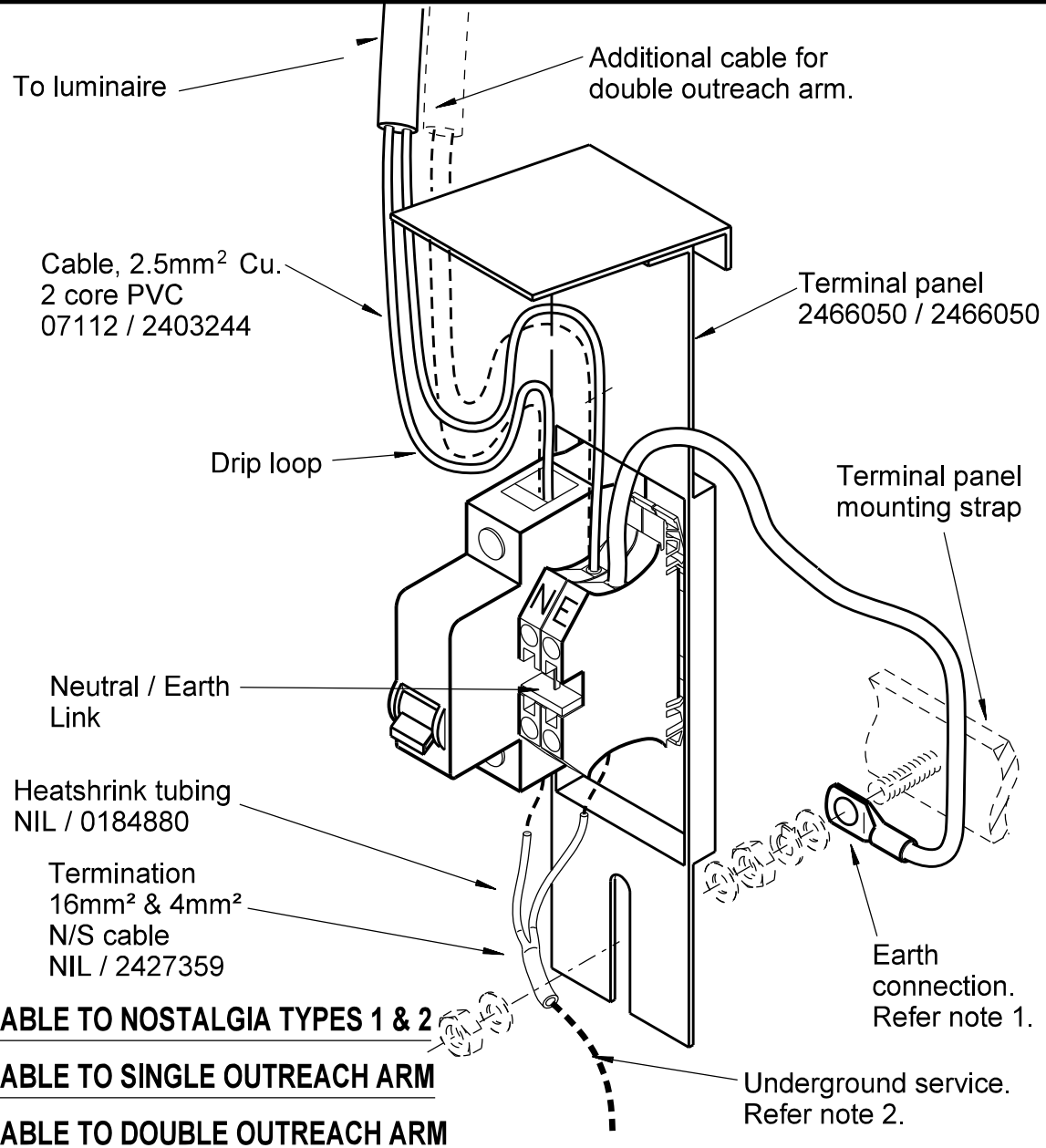

ASSEMBLY 857-1 MINOR ROAD RCBO TERMINAL PANEL & CABLE TO NOSTALGIA TYPES 1 & 2

ASSEMBLY 857-2 MINOR ROAD RCBO TERMINAL PANEL & CABLE TO SINGLE OUTREACH ARM

ASSEMBLY 857-3 MINOR ROAD RCBO TERMINAL PANEL & CABLE TO DOUBLE OUTREACH ARM

A	ORIGINAL ISSUE	REFERENCE DRAWING ENERGEX: NIL	energex	ERGON ENERGY	Approved Ergon: C. Noel — Date: 01/05/18
		REFERENCE DRAWING ERGON: NIL	© COPYRIGHT 2002 ENERGEX ENERGEX Corporation Limited ABN 40 078 849 055	© COPYRIGHT 2002 ERGON ENERGY Ergon Energy Corporation Limited ABN 50 087 646 062	Approved Energex: - — Date: -
		This document must not be reproduced in part or whole without written permission from ENERGEX or Ergon Energy	HARD COPY UNCONTROLLED		Checked: A. Bletchly — Date: 01/05/18
					Drawn: L. Burton / T. Borg — Date: 22/03/18

LIGHTING
ASSEMBLIES
MINOR ROAD
RCBO TERMINAL PANELS

EE DRWG NO: 1-2-857
EGX DRWG NO: 10500-A4-1-2-857

VOLUME	FOLDER	PAGE	ISSUE
1	2	857	0A

MATERIAL

ENERGEX SC	QTY				ERGON SC
	858-1	858-2	858-3	858-4	
22398	1 / -				NIL
22397		1 / -			NIL
22395			1 / -		NIL
22396				1 / -	NIL

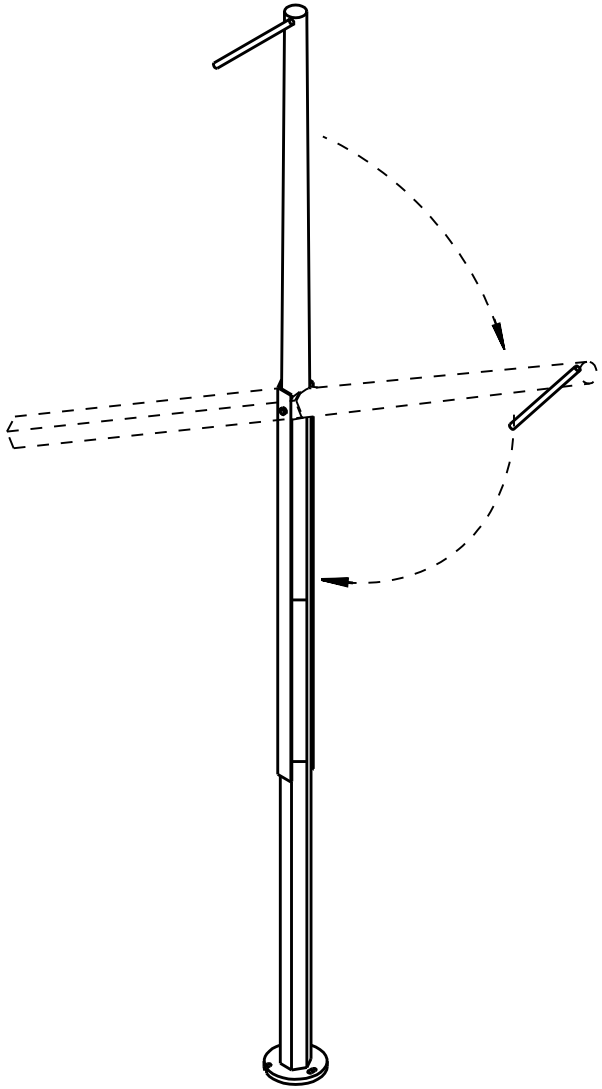

ASSEMBLY 858-1 **MINOR ROAD MID HINGED RH GALV POLE**

ASSEMBLY 858-2 **MINOR ROAD MID HINGED RH GREEN POLE**

ASSEMBLY 858-3 **MINOR ROAD MID HINGED RH BLACK POLE**

ASSEMBLY 858-4 **MINOR ROAD MID HINGED RH BLUE GREY POLE**

A	ORIGINAL ISSUE	REFERENCE DRAWING ENERGEX: NIL		Approved Ergon: J. Brooks	Date: 14/10/10
		REFERENCE DRAWING ERGON: 5 82 8000 1		Approved Energex: R. English	Date: 14/10/10
		This document must not be reproduced in part or whole without written permission from ENERGEX or Ergon Energy		Checked: D. Taylor / B. Oyegoke	Date: 14/10/10
				Drawn: L. Burton / T. Borg	Date: 01/10/10

energex
© COPYRIGHT 2002 ENERGEX
ENERGEX Corporation Limited
ABN 40 078 849 055

ERGON. ENERGY
© COPYRIGHT 2002 ERGON ENERGY
Ergon Energy Corporation Limited
ABN 50 087 646 062

HARD COPY UNCONTROLLED

LIGHTING
ASSEMBLIES - ENERGEX ONLY
MINOR ROAD MID HINGED POLE
4 BOLT

EE DRWG NO: 1-2-858
EGX DRWG NO: 10500-A4-1-2-858

VOLUME	FOLDER	PAGE	ISSUE
1	2	858	0A

MATERIAL

ENERGEX SC	QTY 859-1	ERGON SC
22405	1 / 1	1140638
17119	AR	1420068
02476	5m	0406297
02483	2 / 2	0406311

ONLY TO BE USED IN NON-CYCLONIC AREAS

NOTE:
All bands to be double wrapped

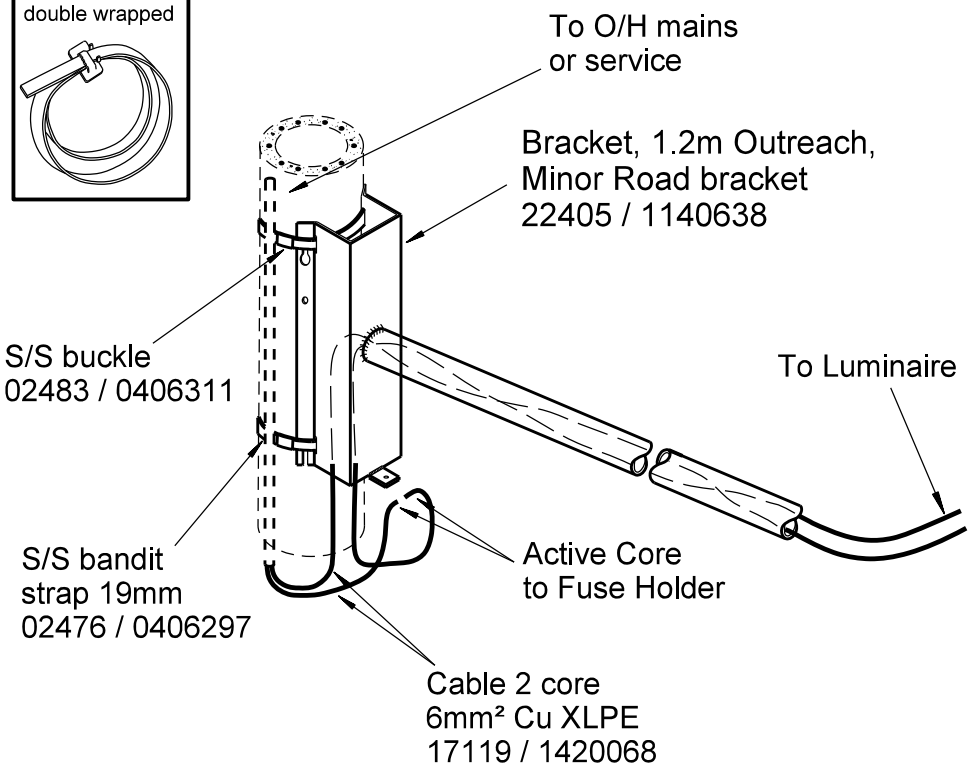

ASSEMBLY 859-1 MINOR ROAD BRACKET MI1 & CABLE MOUNTING TO CONCRETE POLE

MATERIAL

ENERGEX SC	QTY 859-2	ERGON SC
22406	1 / 1	0104692
17119	AR	1420068
02476	5m	0406297
02483	2 / 2	0406311

ONLY TO BE USED IN NON-CYCLONIC AREAS

NOTE:
All bands to be double wrapped

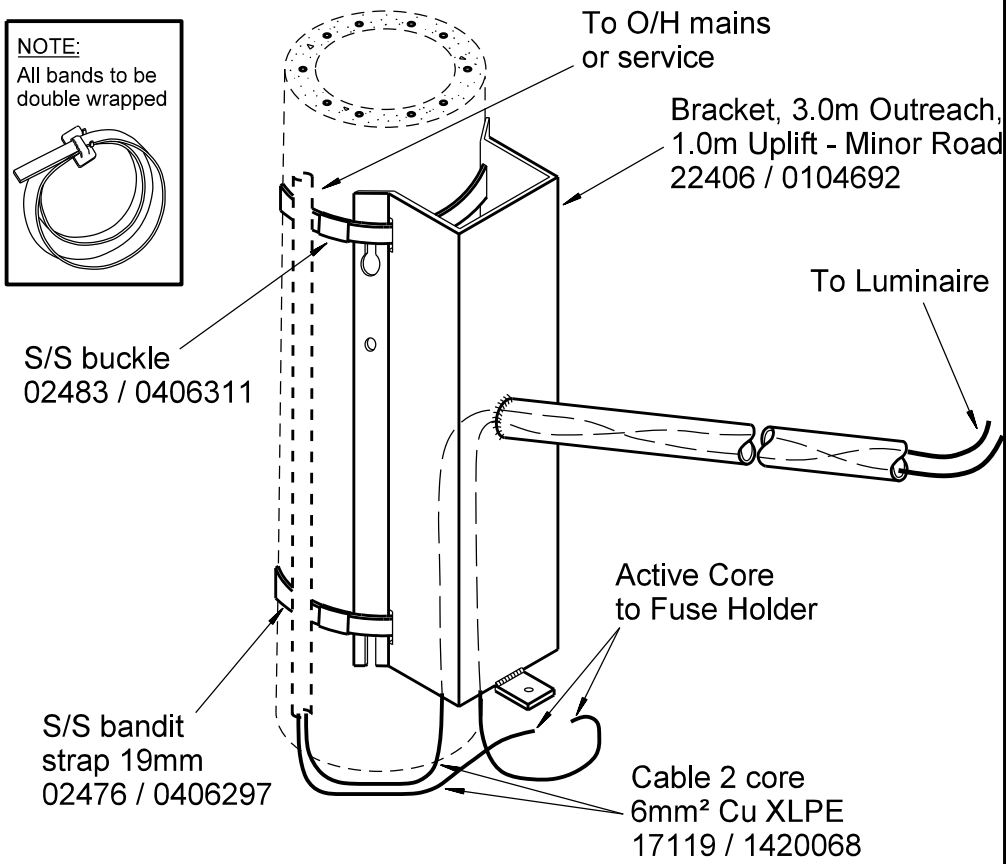

ASSEMBLY 859-2 MINOR ROAD BRACKET MI2 & CABLE MOUNTING TO CONCRETE POLE

A	ORIGINAL ISSUE	REFERENCE DRAWING ENERGEX: NIL	energex	ERGON ENERGY	Approved Ergon: A. Bletchly, Date: 09/08/19
B	10.07.19	REFERENCE DRAWING ERGON: NIL	© COPYRIGHT 2019 ENERGEX ENERGEX Corporation Limited ABN 40 078 849 055	©COPYRIGHT 2019 ERGON ENERGY Ergon Energy Corporation Limited ABN 50 087 646 062	Approved Energex: A. Bletchly, Date: 09/08/19
		This document must not be reproduced in part or whole without written permission from ENERGEX or Ergon Energy	HARD COPY UNCONTROLLED		Checked: K. Slater, Date: 09/08/19
					Drawn: L. Burton / T. Borg, Date: 09/10/18

LIGHTING
ASSEMBLIES
MINOR ROAD STREETLIGHT BRACKETS
MI1 & MI2 MOUNTING TO CONCRETE POLE

EE DRWG NO: 1-2-859	VOLUME	FOLDER	PAGE	ISSUE
EGX DRWG NO: 10500-A4-1-2-859	1	2	859	0B

MATERIAL

ENERGEX SC	QTY 860-1	ERGON SC
22390	1 / 1	0104186
17119	AR	1420068
02476	5m	0406297
02483	2 / 2	0406311

ONLY TO BE USED IN NON-CYCLONIC AREAS

NOTE:
All bands to be double wrapped

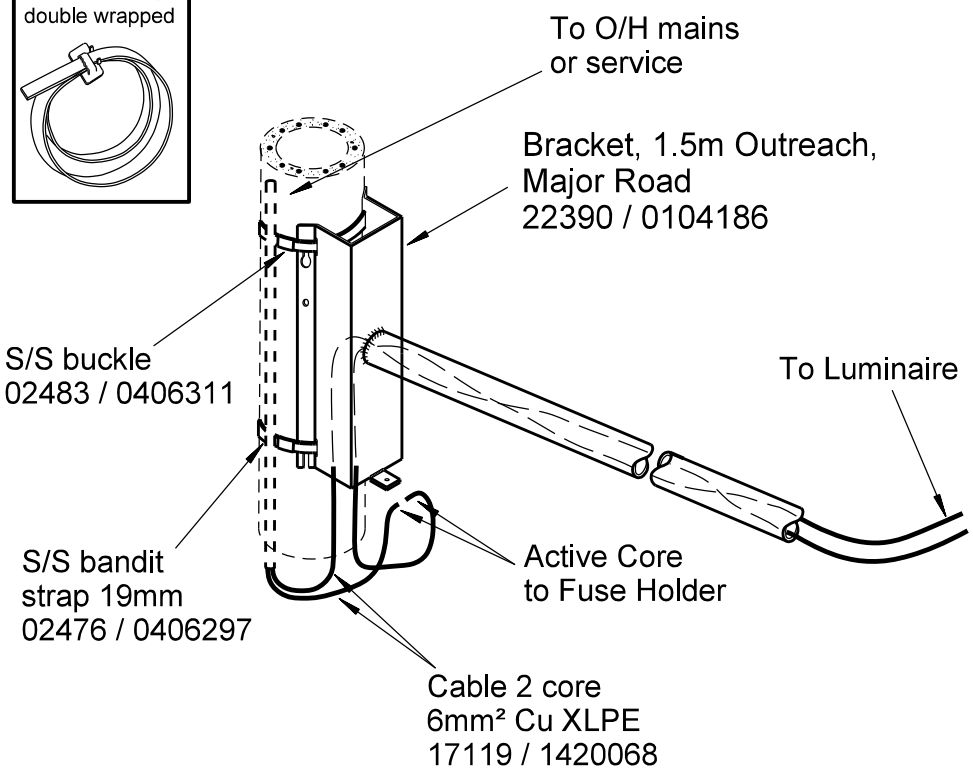

ASSEMBLY 860-1 **MAJOR ROAD BRACKET MA1 & CABLE MOUNTING TO CONCRETE POLE**

MATERIAL

ENERGEX SC	QTY 860-2	ERGON SC
22402	1 / 1	0104187
17119	AR	1420068
02476	5m	0406297
02483	2 / 2	0406311

ONLY TO BE USED IN NON-CYCLONIC AREAS

NOTE:
All bands to be double wrapped

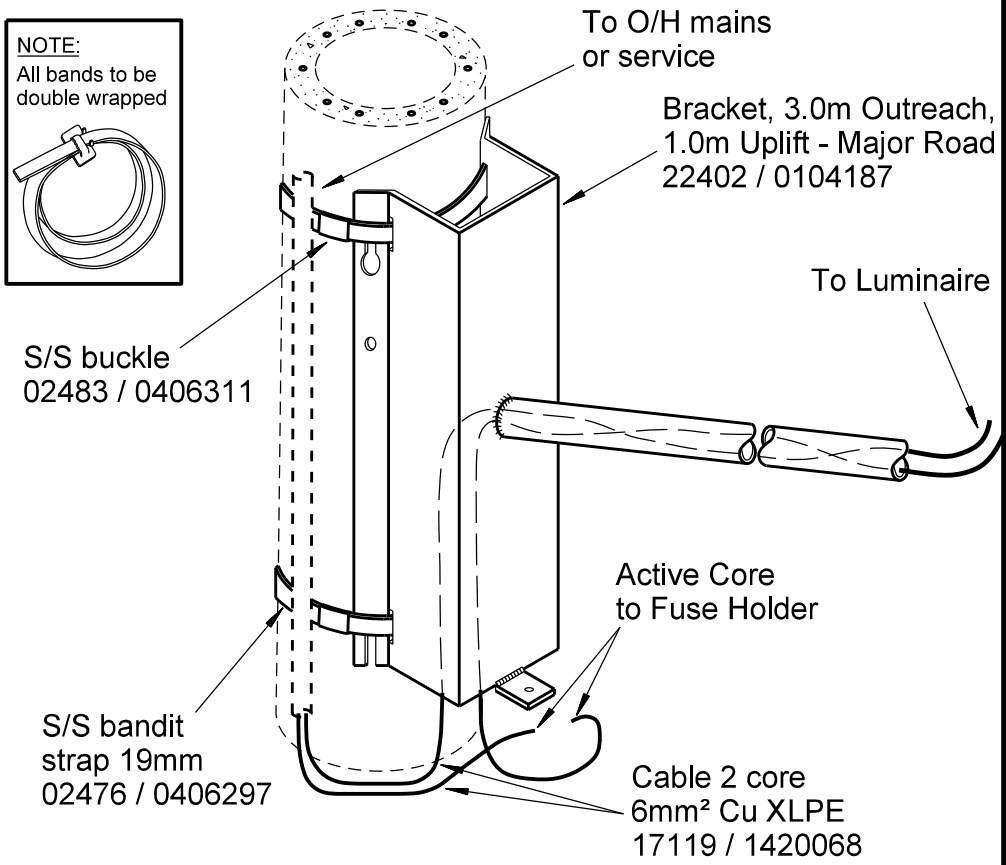

ASSEMBLY 860-2 **MAJOR ROAD BRACKET MA2 & CABLE MOUNTING TO CONCRETE POLE**

A	ORIGINAL ISSUE	REFERENCE DRAWING ENERGEX: NIL	energex	ERGON ENERGY	Approved Ergon: A. Bletchly, Date: 01/03/19
		REFERENCE DRAWING ERGON: NIL			Approved Energex: A. Bletchly, Date: 01/03/19
			© COPYRIGHT 2019 ENERGEX ENERGEX Corporation Limited ABN 40 078 849 055	© COPYRIGHT 2019 ERGON ENERGY Ergon Energy Corporation Limited ABN 50 087 646 062	Checked: K. Slater, Date: 01/03/19
		This document must not be reproduced in part or whole without written permission from ENERGEX or Ergon Energy	HARD COPY UNCONTROLLED		Drawn: L. Burton / T. Borg, Date: 10/10/18

LIGHTING
ASSEMBLIES
MAJOR ROAD STREETLIGHT BRACKETS
MA1 & MA2 MOUNTING TO CONCRETE POLE

EE DRWG NO: 1-2-860	VOLUME	FOLDER	PAGE	ISSUE
EGX DRWG NO: 10500-A4-1-2-860	1	2	860	0A

MATERIAL

ENERGEX SC	QTY 862-1	QTY 862-2	ERGON SC
22403	1 / 1		0104188
22404		1 / 1	0104190
17119	AR	AR	1420068
02476	15m	15m	0406297
02483	4 / 4	4 / 4	0406311
12917	2 / 2	2 / 2	12917
00186	2 / 2	2 / 2	1703263
01044	4 / 4	4 / 4	1777542
01069	2 / 2	2 / 2	1779156

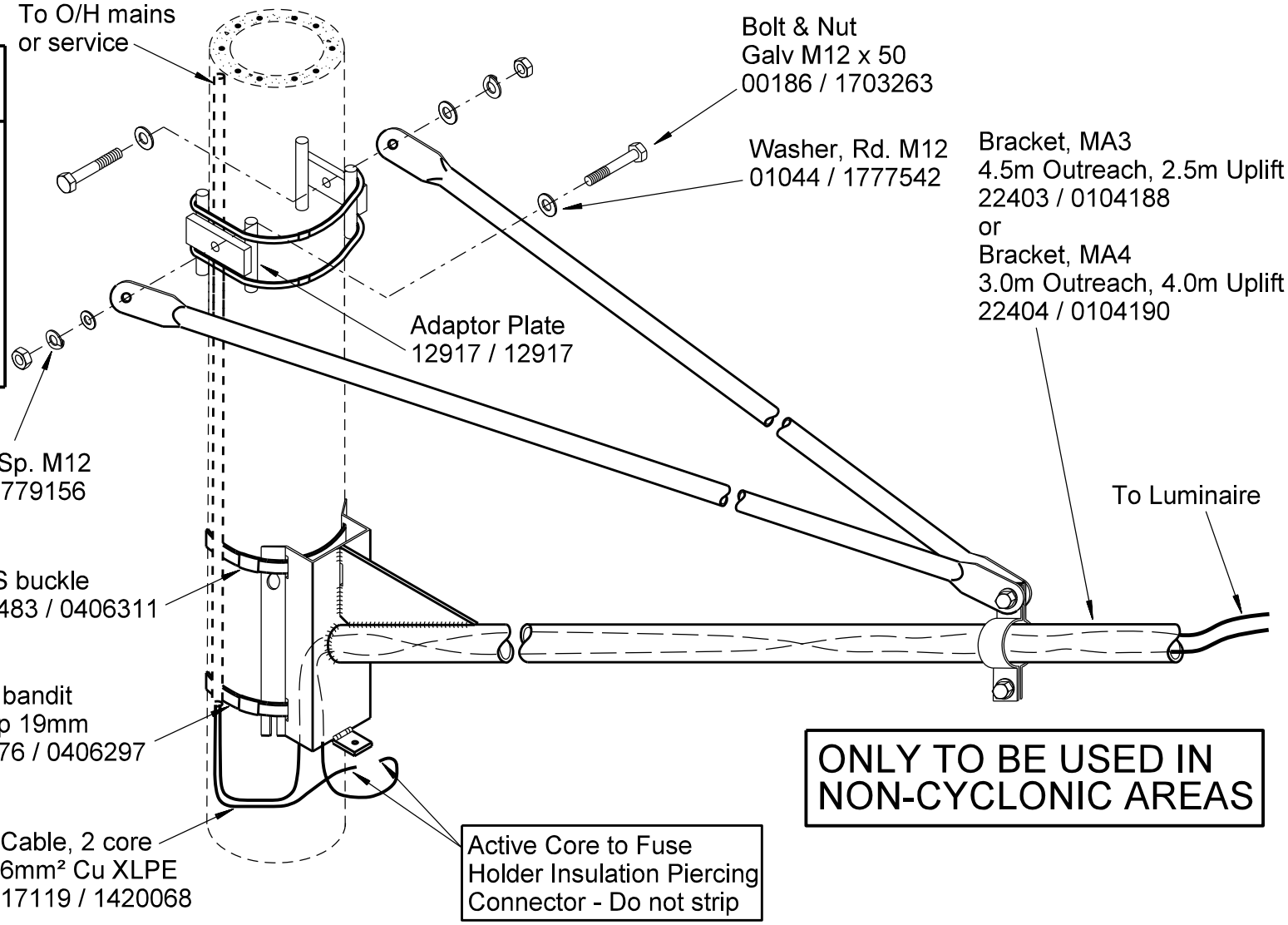

NOTE:
All bands to be double wrapped

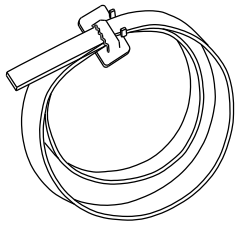

ONLY TO BE USED IN NON-CYCLONIC AREAS

ASSEMBLY 862-1 **MAJOR ROAD BRACKET MA3 & CABLE, MOUNTING TO CONCRETE POLE**

ASSEMBLY 862-2 **MAJOR ROAD BRACKET MA4 & CABLE, MOUNTING TO CONCRETE POLE**

A	ORIGINAL ISSUE	REFERENCE DRAWING ENERGEX: NIL	energex	Approved Ergon: A. Bletchly 01/03/19	**LIGHTING**
		REFERENCE DRAWING ERGON: NIL	ERGON ENERGY	Approved Energex: A. Bletchly 01/03/19	ASSEMBLIES
			© COPYRIGHT 2019 ENERGEX ENERGEX Corporation Limited ABN 40 078 849 055	Checked: K. Slater 01/03/19	MAJOR ROAD STREETLIGHT BRACKETS
		This document must not be reproduced in part or whole without written permission from ENERGEX or Ergon Energy	HARD COPY UNCONTROLLED	Drawn: L. Burton / T. Borg 10/10/18	MA3 & MA4 MOUNTING TO CONCRETE POLE

© COPYRIGHT 2019 ERGON ENERGY
Ergon Energy Corporation Limited
ABN 50 087 646 062

EE DRWG NO: 1-2-862	VOLUME	FOLDER	PAGE	ISSUE
EGX DRWG NO: 10500-A4-1-2-862	1	2	862	0A

MATERIAL

ENERGEX SC	QTY 865-5	ERGON SC
16276	1 / 1	2433316

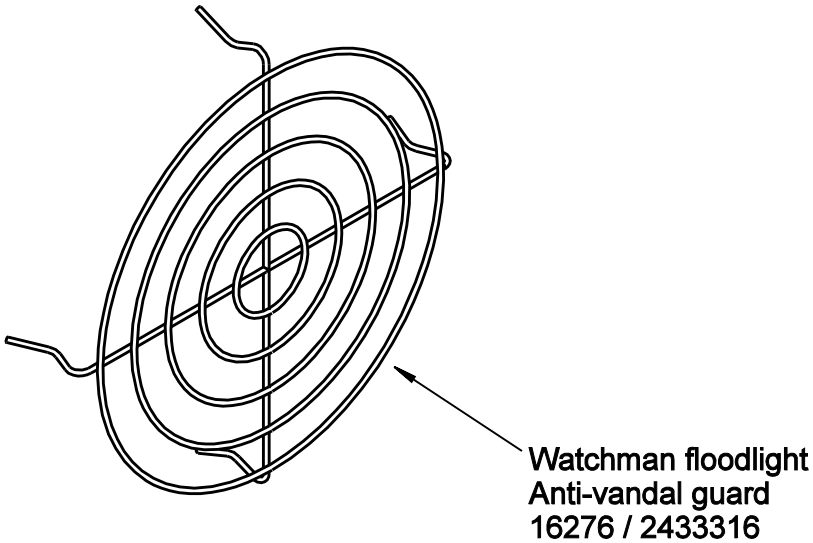

ASSEMBLY 865-5 WATCHMAN FLOODLIGHT ANTI-VANDAL GUARD

A	ORIGINAL ISSUE

REFERENCE DRAWING ENERGEX: 4927-A4-15.1

REFERENCE DRAWING ERGON: NIL

This document must not be reproduced in part or whole without written permission from ENERGEX or Ergon Energy

energex

© COPYRIGHT 2002 ENERGEX
ENERGEX Corporation Limited
ABN 40 078 849 055

ERGON. ENERGY

© COPYRIGHT 2002 ERGON ENERGY
Ergon Energy Corporation Limited
ABN 50 087 646 062

HARD COPY UNCONTROLLED

		Date
Approved Ergon	J. Brooks	14/10/10
Approved Energex	R. English	14/10/10
Checked	D. Taylor / B. Oyegoke	14/10/10
Drawn	L. Burton / T. Borg	01/10/10

LIGHTING
ASSEMBLIES
WATCHMAN FLOODLIGHT ANTI-VANDAL GUARD

EE DRWG NO: 1-2-865
EGX DRWG NO: 10500-A4-1-2-865

VOLUME	FOLDER	PAGE	ISSUE
1	2	865	0A

MATERIAL

ENERGEX SC	QTY	ERGON SC
NIL	- / 1	0104728
NIL	- / 1	1011106
NIL	- / AR	0184880
NIL	- / 2	1015016
NIL	- / 1	0406311
NIL	- / 3m	0406297

NOTE:
All bands to be double wrapped

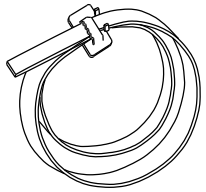

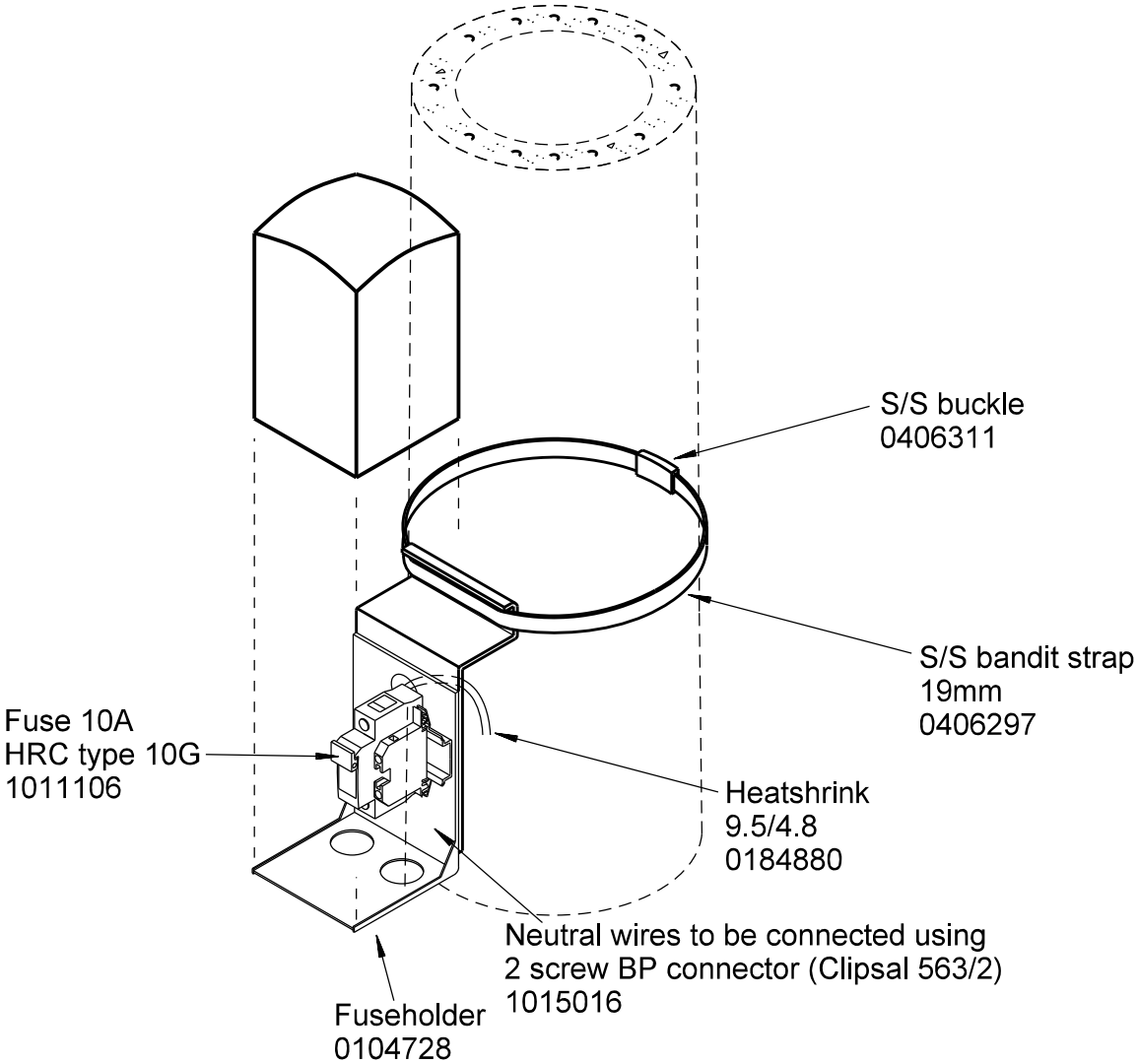

ASSEMBLY 866-1 FUSEHOLDER TO STEEL / CONCRETE POLE

A	ORIGINAL ISSUE	REFERENCE DRAWING ENERGEX: NIL	energex	ERGON ENERGY	Approved Ergon: A. Bletchly, Date: 01/03/19	**LIGHTING**
		REFERENCE DRAWING ERGON: NIL	© COPYRIGHT 2019 ENERGEX ENERGEX Corporation Limited ABN 40 078 849 055	©COPYRIGHT 2019 ERGON ENERGY Ergon Energy Corporation Limited ABN 50 087 646 062	Approved Energex: A. Bletchly, Date: 01/03/19	ASSEMBLIES - ERGON ENERGY ONLY
		This document must not be reproduced in part or whole without written permission from ENERGEX or Ergon Energy	HARD COPY UNCONTROLLED		Checked: K. Slater, Date: 01/03/19	FUSEHOLDER TO STEEL / CONCRETE POLE
					Drawn: L. Burton / T. Borg, Date: 19/12/18	EE DRWG NO: 1-2-866 / EGX DRWG NO: 10500-A4-1-2-866

VOLUME	FOLDER	PAGE	ISSUE
1	2	866	0A

MATERIAL

ENERGEX SC	QTY 867-1	QTY 867-2	ERGON SC
15528	1 / 1		0168052
06839	1 / 1		0168055
2433704	1 / 1	1 / 1	2433704
08345	AR	AR	1542919
Nil	- / 2	- / 2	2427359
Nil	- / 2	- / 2	0184880
Nil	- / 2	- / 2	2400915
Nil	- / 2	- / 2	0121008
06252	4 / -	4 / -	Nil
06616	2 / -	2 / -	0121008
01079	2 / -	2 / -	Nil
12889	2 / -	2 / -	Nil

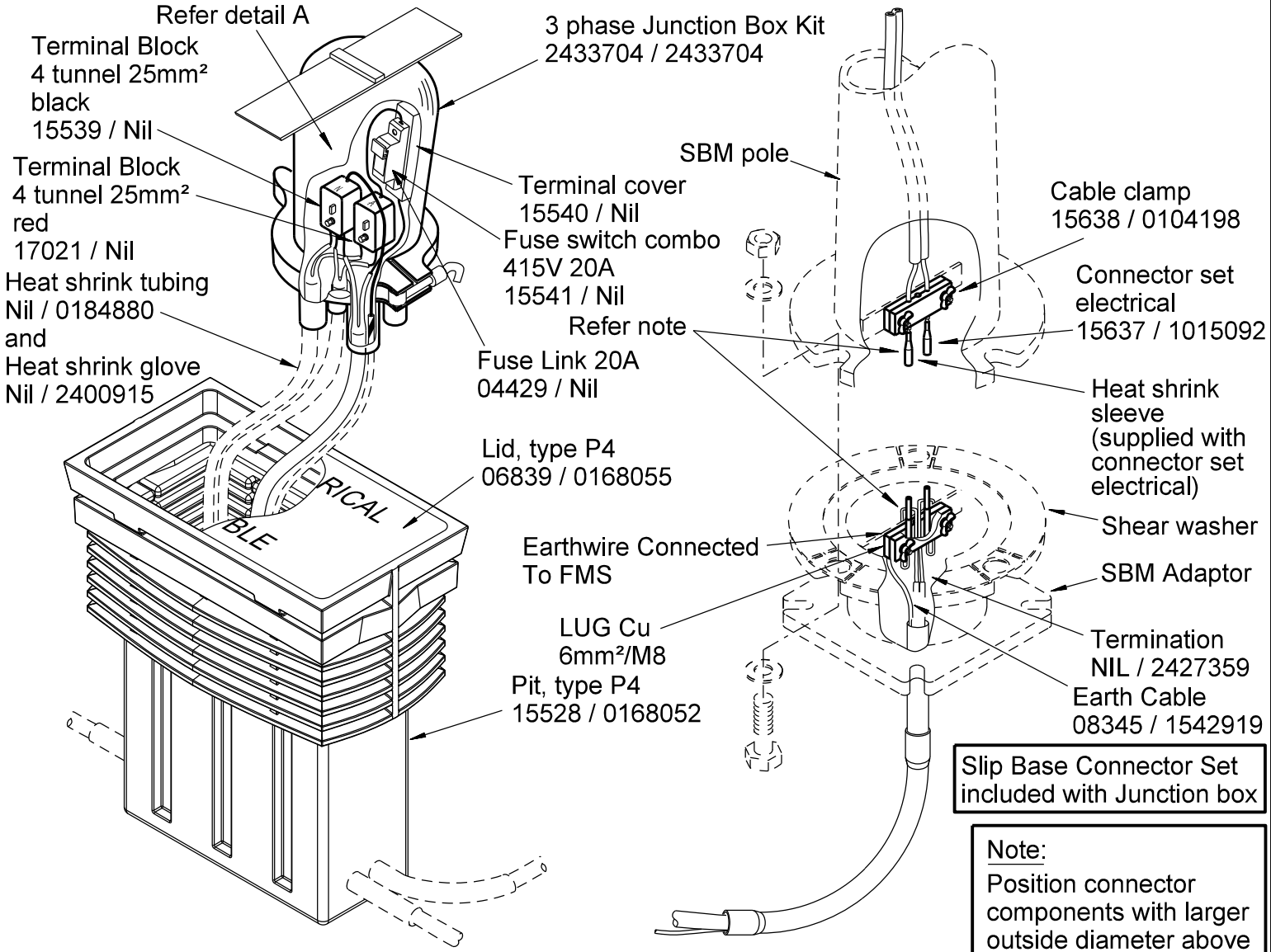

Slip Base Connector Set included with Junction box

Note:
Position connector components with larger outside diameter above connector components with smaller outside diameter.

ASSEMBLY 867-1 **CONNECTION SBM POLE TO PIT THREE PHASE - CONTAINS PIT, LID & JUNCTION BOX KIT**

ASSEMBLY 867-2 **CONNECTION SBM POLE TO PIT THREE PHASE - CONTAINS JUNCTION BOX KIT ONLY**

A	ORIGINAL ISSUE	
C	24.10.14	
D	31.10.16	
E	22.03.18	
F	10.07.19	

REFERENCE DRAWING ENERGEX: 4927-A4-2.28,910.6,11

REFERENCE DRAWING ERGON: NIL

This document must not be reproduced in part or whole without written permission from ENERGEX or Ergon Energy

energex

© COPYRIGHT 2019 ENERGEX
ENERGEX Corporation Limited
ABN 40 078 849 055

ERGON ENERGY

© COPYRIGHT 2019 ERGON ENERGY
Ergon Energy Corporation Limited
ABN 50 087 646 062

HARD COPY UNCONTROLLED

		Date
Approved Ergon	A. Bletchly	09/08/19
Approved Energex	A. Bletchly	09/08/19
Checked	K. Slater	09/08/19
Drawn	L. Burton / T. Borg	01/10/10

LIGHTING
ASSEMBLIES
MAJOR ROAD
CONNECTION SBM POLE TO PIT THREE PHASE

EE DRWG NO: 1-2-867
EGX DRWG NO: 10500-A4-1-2-867

VOLUME	FOLDER	PAGE	ISSUE
1	2	867	0F

MATERIAL

ENERGEX SC	QTY							ERGON SC
	868-1	868-2	868-3	868-4	868-5	868-6	868-7	
05502	1 / 1							1184026
2467330	1 / 1							2467330
2467355		1 / 1						2467355
2461366			1 / 1					2461366
2461358				1 / 1				2461358
2461374					1 / 1			2461374
2461382						1 / 1		2461382
2467348							1 / 1	2467348

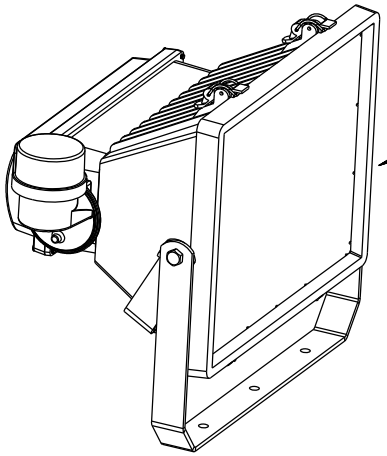

Gerard Sylflood Asymmetrical
2461366 (S250)
2461358 (S400)
2461374 (H250)
2461382 (H400)

Nema PE Cell
05502 / 1184026

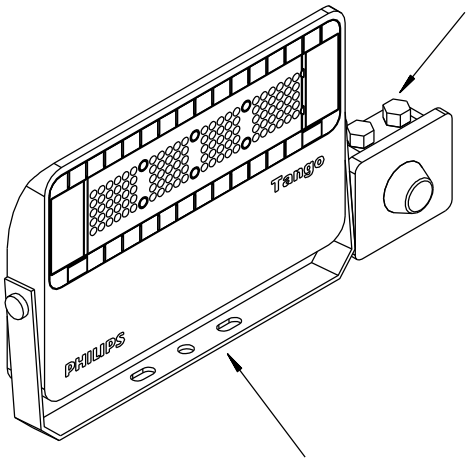

Philips Tango G3 Small / Medium
Asymmetrical Medium Beam
2467330 (L100)
2467348 (L200)

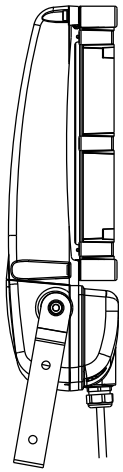

Gerard Pierlite Quantum
LED Asymmetrical 320W
2467355 (L300)

ASSEMBLY 868-1 PEDESTRIAN FLOODLIGHT L100
ASSEMBLY 868-2 PEDESTRIAN FLOODLIGHT L300
ASSEMBLY 868-3 PEDESTRIAN FLOODLIGHT S250
ASSEMBLY 868-4 PEDESTRIAN FLOODLIGHT S400
ASSEMBLY 868-5 PEDESTRIAN FLOODLIGHT H250
ASSEMBLY 868-6 PEDESTRIAN FLOODLIGHT H400
ASSEMBLY 868-7 PEDESTRIAN FLOODLIGHT L200

A	ORIGINAL ISSUE	REFERENCE DRAWING ENERGEX: NIL	Approved Ergon: A. Bletchly	Date: 09/08/19	**LIGHTING** ASSEMBLIES PEDESTRIAN FLOODLIGHT
B	26.06.19	REFERENCE DRAWING ERGON: NIL	Approved Energex: A. Bletchly	Date: 09/08/19	
			Checked: K. Slater	Date: 09/08/19	
			Drawn: T. Borg	Date: 16/01/19	

This document must not be reproduced in part or whole without written permission from ENERGEX or Ergon Energy

energex
© COPYRIGHT 2019 ENERGEX
ENERGEX Corporation Limited
ABN 40 078 849 055

ERGON ENERGY
© COPYRIGHT 2019 ERGON ENERGY
Ergon Energy Corporation Limited
ABN 50 087 646 062

HARD COPY UNCONTROLLED

EE DRWG NO: 1-2-868	VOLUME	FOLDER	PAGE	ISSUE
EGX DRWG NO: 10500-A4-1-2-868	1	2	868	0B

MATERIAL

ENERGEX SC	QTY				ERGON SC
	869-1	869-2	869-3	869-4	
11610	1 / 1				1104741
2469179			1 / 1		2469179
2469187		1 / 1			2469187
00164	2 / 2	2 / 2			1702852
16868	2 / 2	2 / 2			1777534
01072	2 / 2	2 / 2			1779154
09878			2 / 2	2 / 2	2400019
21276			2 / 2	2 / 2	1777569
01074			2 / 2	2 / 2	1779158
2471654				1 / 1	2471654

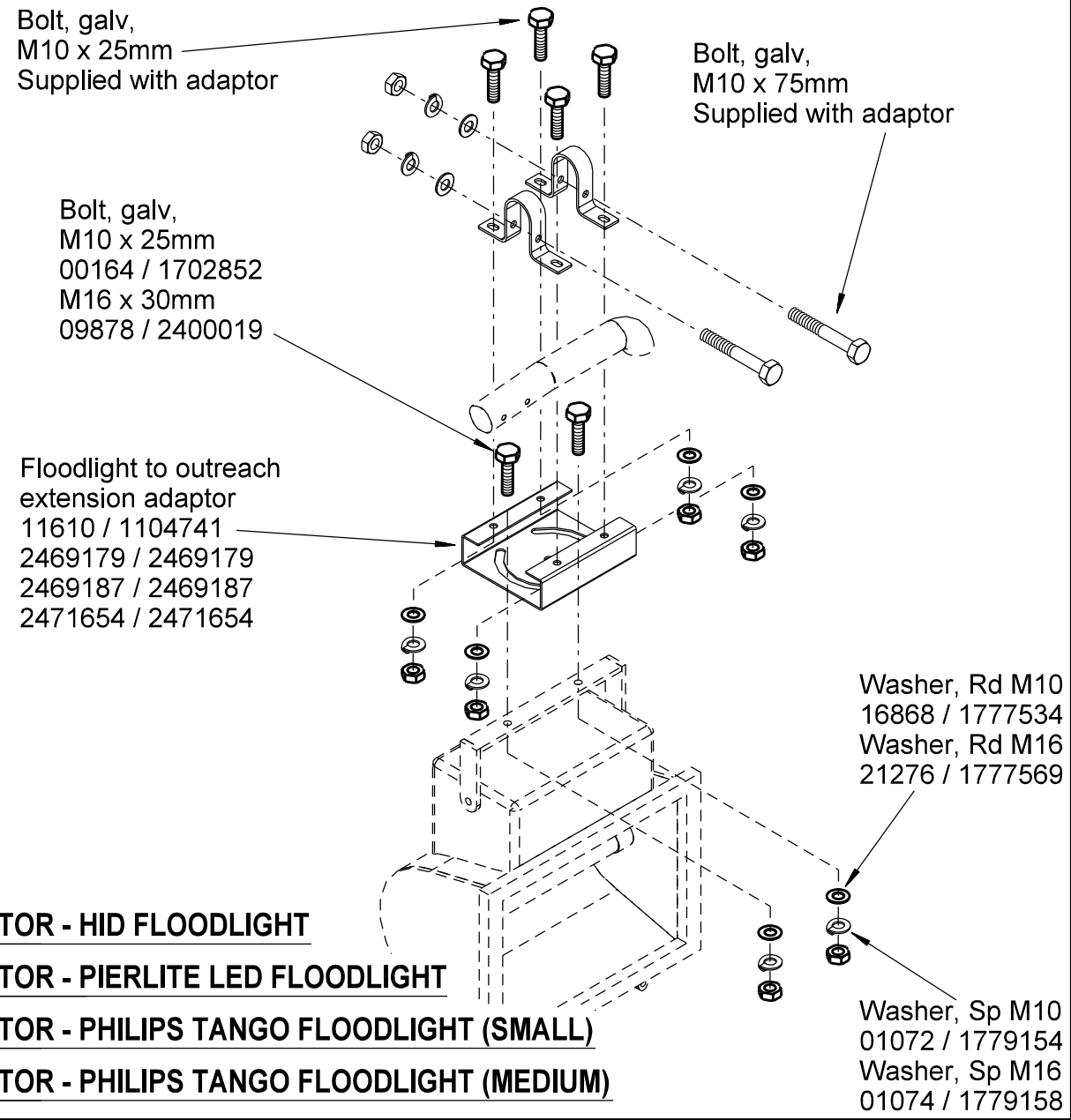

ASSEMBLY 869-1 MAJOR ROAD FLOODLIGHT ADAPTOR - HID FLOODLIGHT

ASSEMBLY 869-2 MAJOR ROAD FLOODLIGHT ADAPTOR - PIERLITE LED FLOODLIGHT

ASSEMBLY 869-3 MAJOR ROAD FLOODLIGHT ADAPTOR - PHILIPS TANGO FLOODLIGHT (SMALL)

ASSEMBLY 869-4 MAJOR ROAD FLOODLIGHT ADAPTOR - PHILIPS TANGO FLOODLIGHT (MEDIUM)

A	ORIGINAL ISSUE	REFERENCE DRAWING ENERGEX: NIL	energex	ERGON ENERGY	Approved Ergon: A. Bletchly, Date: 09/08/19
B	26.06.19	REFERENCE DRAWING ERGON: NIL	© COPYRIGHT 2019 ENERGEX ENERGEX Corporation Limited ABN 40 078 849 055	© COPYRIGHT 2019 ERGON ENERGY Ergon Energy Corporation Limited ABN 50 087 646 062	Approved Energex: A. Bletchly, Date: 09/08/19
		This document must not be reproduced in part or whole without written permission from ENERGEX or Ergon Energy	HARD COPY UNCONTROLLED		Checked: K. Slater, Date: 09/08/19
					Drawn: L. Burton / T. Borg, Date: 16/01/19

LIGHTING
ASSEMBLIES
FLOODLIGHT ADAPTOR

EE DRWG NO: 1-2-869
EGX DRWG NO: 10500-A4-1-2-869

VOLUME	FOLDER	PAGE	ISSUE
1	2	869	0B

MATERIAL

ENERGEX SC	QTY 870-1	QTY 870-2	ERGON SC
13469	1 / -		NIL
21595	1 / -		NIL
21223		1 / -	NIL
23363		1 / -	NIL

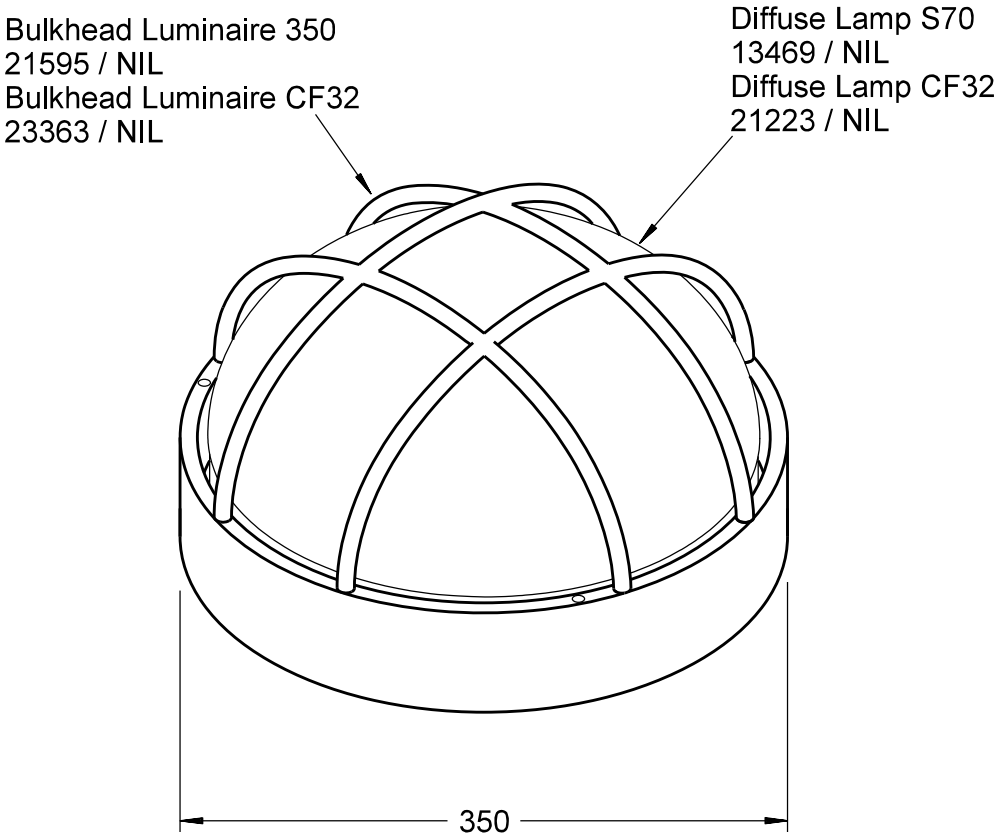

ASSEMBLY 870-1 SPECIAL BULKHEAD LUMINAIRE S70

ASSEMBLY 870-2 SPECIAL BULKHEAD LUMINAIRE CF32

A	ORIGINAL ISSUE	REFERENCE DRAWING ENERGEX: 4927-A4-2.45	energex	Approved Ergon: C. Noel	Date: 21/03/14
B	15.01.13	REFERENCE DRAWING ERGON: NIL	ERGON ENERGY	Approved Energex: F. Zaini	Date: 21/03/14
				Checked: P. Relf / A. Bletchly	Date: 21/03/14
				Drawn: L. Burton / T. Borg	Date: 01/10/10

This document must not be reproduced in part or whole without written permission from ENERGEX or Ergon Energy

© COPYRIGHT 2002 ENERGEX
ENERGEX Corporation Limited
ABN 40 078 849 055

© COPYRIGHT 2002 ERGON ENERGY
Ergon Energy Corporation Limited
ABN 50 087 646 062

HARD COPY UNCONTROLLED

LIGHTING
ASSEMBLIES - ENERGEX ONLY
BULKHEAD LUMINAIRES
70W HPS & 32W CFL

EE DRWG NO: 1-2-870	VOLUME	FOLDER	PAGE	ISSUE
EGX DRWG NO: 10500-A4-1-2-870	1	2	870	0B

MATERIAL

ENERGEX SC	QTY 872-3	ERGON SC
22393	1 / 1	0126019

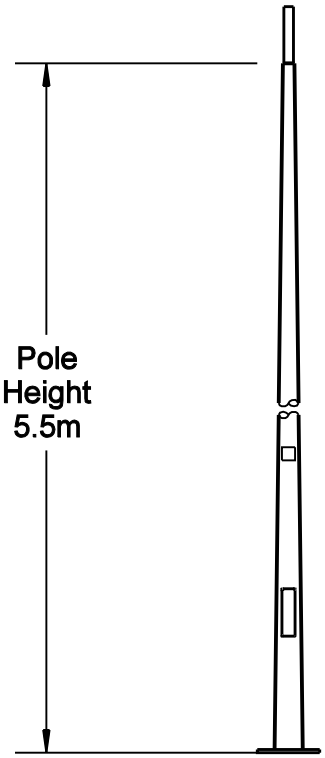

ASSEMBLY 872-4 MINOR ROAD POLE 5.5m BASE PLATE MOUNTED STEEL

MATERIAL

ENERGEX SC	QTY 872-9	ERGON SC
22394	1 / -	NIL

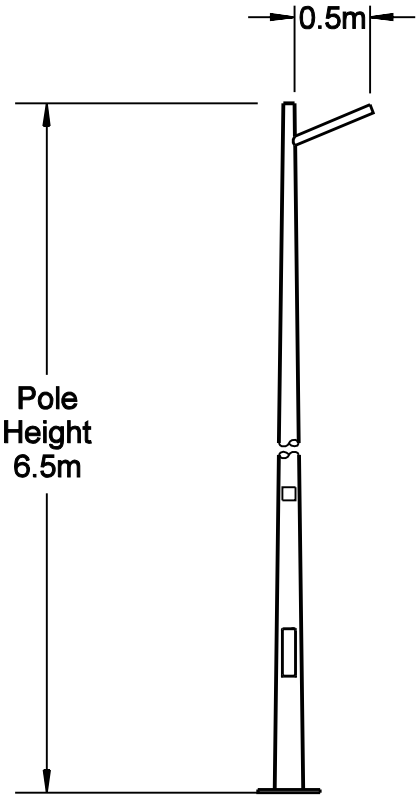

ASSEMBLY 872-9 MINOR ROAD POLE 6.5m BASE PLATE MOUNTED SINGLE PIECE

A	ORIGINAL ISSUE	REFERENCE DRAWING ENERGEX: 4927-A4-2.5	energex	ERGON. ENERGY	Approved Ergon: J. Brooks — Date: 14/10/10
		REFERENCE DRAWING ERGON: NIL	© COPYRIGHT 2002 ENERGEX ENERGEX Corporation Limited ABN 40 078 849 055	©COPYRIGHT 2002 ERGON ENERGY Ergon Energy Corporation Limited ABN 50 087 646 062	Approved Energex: R. English — Date: 14/10/10
		This document must not be reproduced in part or whole without written permission from ENERGEX or Ergon Energy	HARD COPY UNCONTROLLED		Checked: D. Taylor / B. Oyegoke — Date: 14/10/10
					Drawn: L. Burton / T. Borg — Date: 01/10/10

LIGHTING
ASSEMBLIES
MINOR ROAD
BASE PLATE MOUNTED STEEL & SINGLE PIECE POLE

EE DRWG NO: 1-2-872
EGX DRWG NO: 10500-A4-1-2-872

VOLUME	FOLDER	PAGE	ISSUE
1	2	872	0A

MATERIAL

ENERGEX SC	QTY															ERGON SC
	873-0	873-1	873-2	873-3	873-4	873-5	873-6	873-7	873-8	873-9	873-A	873-B	873-C	873-D	873-E	
NIL	- / 1															2432243
NIL		- / 1														2432250
NIL			- / 1													2432268
NIL				- / 1												2432276
NIL					- / 1											2432284
NIL						- / 1										2432292
NIL							- / 1			- / 1						2432300
NIL								- / 1								2432318
NIL									- / 1							2432326
NIL											- / 1					2432334
NIL												- / 1				2432342
NIL													- / 1			2432359
NIL														- / 1		2432367
NIL															- / 1	2432375

Number 0
NIL / 2432243

Number 1
NIL / 2432250

Number 2
NIL / 2432268

Number 3
NIL / 2432276

Number 4
NIL / 2432284

Number 5
NIL / 2432292

Number 6 / 9
NIL / 2432300

Number 7
NIL / 2432318

Number 8
NIL / 2432326

Letter A
NIL / 2432334

Letter B
NIL / 2432342

Letter C
NIL / 2432359

Letter D
NIL / 2432367

Letter E
NIL / 2432375

ASSEMBLY 873-0 ASSET IDENTIFICATION NUMBER '0'
ASSEMBLY 873-1 ASSET IDENTIFICATION NUMBER '1'
ASSEMBLY 873-2 ASSET IDENTIFICATION NUMBER '2'
ASSEMBLY 873-3 ASSET IDENTIFICATION NUMBER '3'
ASSEMBLY 873-4 ASSET IDENTIFICATION NUMBER '4'
ASSEMBLY 873-5 ASSET IDENTIFICATION NUMBER '5'
ASSEMBLY 873-6 ASSET IDENTIFICATION NUMBER '6'
ASSEMBLY 873-7 ASSET IDENTIFICATION NUMBER '7'
ASSEMBLY 873-8 ASSET IDENTIFICATION NUMBER '8'
ASSEMBLY 873-9 ASSET IDENTIFICATION NUMBER '9'

Refer Assy 874 for Asset Identification Label Tray

ASSEMBLY 873-A ASSET IDENTIFICATION LETTER 'A'
ASSEMBLY 873-B ASSET IDENTIFICATION LETTER 'B'
ASSEMBLY 873-C ASSET IDENTIFICATION LETTER 'C'
ASSEMBLY 873-D ASSET IDENTIFICATION LETTER 'D'
ASSEMBLY 873-E ASSET IDENTIFICATION LETTER 'E'

A	ORIGINAL ISSUE

REFERENCE DRAWING ENERGEX: NIL

REFERENCE DRAWING ERGON: NIL

This document must not be reproduced in part or whole without written permission from ENERGEX or Ergon Energy

energex

© COPYRIGHT 2002 ENERGEX
ENERGEX Corporation Limited
ABN 40 078 849 055

ERGON. ENERGY

© COPYRIGHT 2002 ERGON ENERGY
Ergon Energy Corporation Limited
ABN 50 087 646 062

HARD COPY UNCONTROLLED

		Date
Approved Ergon	J. Brooks	14/10/10
Approved Energex	R. English	14/10/10
Checked	D. Taylor / B. Oyegoke	14/10/10
Drawn	L. Burton / T. Borg	01/10/10

LIGHTING

ASSEMBLIES - ERGON ENERGY ONLY
SIGN, ASSET IDENTIFICATION
NUMERALS & LETTERS

EE DRWG NO: 1-2-873
EGX DRWG NO: 10500-A4-1-2-873

VOLUME	FOLDER	PAGE	ISSUE
1	2	873	0A

MATERIAL

ENERGEX SC	QTY 874-2	ERGON SC
NIL	- / 1	2432235
NIL	- / 2	0104435

Refer Assy 873 for Asset Identification numbers and letters

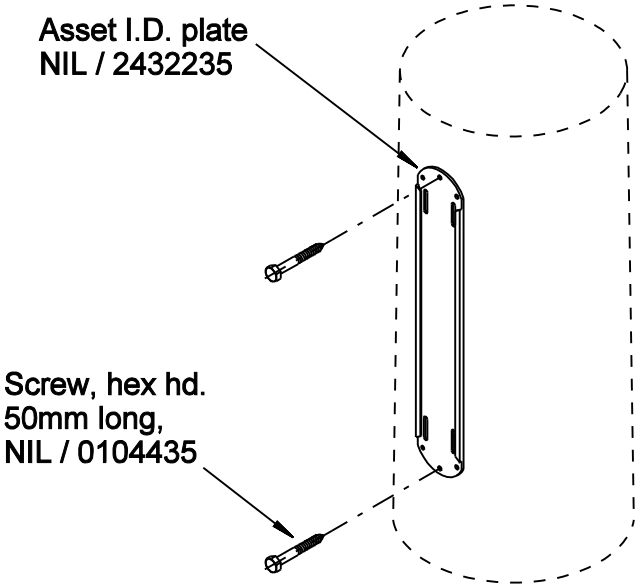

ASSEMBLY 874-2 ASSET IDENTIFICATION BACKING PLATE TO WOOD POLE

MATERIAL

ENERGEX SC	QTY 874-4	QTY 874-6	ERGON SC
NIL	- / 1	- / 1	2432235
NIL	AR		Loctite 454
NIL		AR	2406020

Refer Assy 873 for Asset Identification numbers and letters

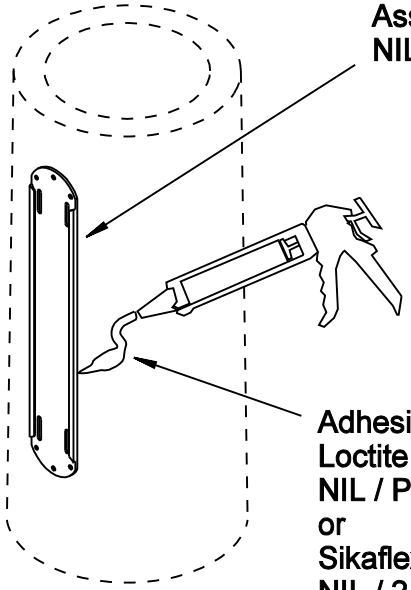

ASSEMBLY 874-4 ASSET IDENTIFICATION BACKING PLATE TO POWDER COATED POLE

ASSEMBLY 874-6 ASSET IDENTIFICATION BACKING PLATE TO CONCRETE / STEEL POLE

A	ORIGINAL ISSUE

REFERENCE DRAWING ENERGEX: NIL

REFERENCE DRAWING ERGON: NIL

This document must not be reproduced in part or whole without written permission from ENERGEX or Ergon Energy

energex

© COPYRIGHT 2002 ENERGEX
ENERGEX Corporation Limited
ABN 40 078 849 055

ERGON. ENERGY

© COPYRIGHT 2002 ERGON ENERGY
Ergon Energy Corporation Limited
ABN 50 087 646 062

HARD COPY UNCONTROLLED

		Date
Approved Ergon	J. Brooks	14/10/10
Approved Energex	R. English	14/10/10
Checked	D. Taylor / B. Oyegoke	14/10/10
Drawn	L. Burton / T. Borg	01/10/10

LIGHTING

ASSEMBLIES - ERGON ENERGY ONLY
SIGN, ASSET IDENTIFICATION LABEL TRAY
TO WOOD, CONCRETE & STEEL POLE

EE DRWG NO: 1-2-874
EGX DRWG NO: 10500-A4-1-2-874

VOLUME	FOLDER	PAGE	ISSUE
1	2	874	0A

MATERIAL

ENERGEX SC	QTY 875-1	ERGON SC
14815	1 / 1	2433803

SL 32A label pair
14185 / 2433803

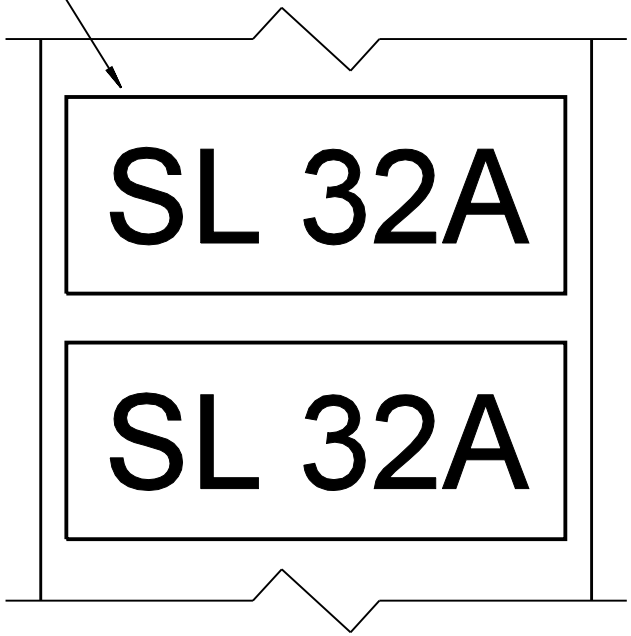

ASSEMBLY 875-1 SL32A LABEL FOR SERVICE FUSE

A	ORIGINAL ISSUE

REFERENCE DRAWING ENERGEX: NIL

REFERENCE DRAWING ERGON: NIL

This document must not be reproduced in part or whole without written permission from ENERGEX or Ergon Energy

energex

© COPYRIGHT 2002 ENERGEX
ENERGEX Corporation Limited
ABN 40 078 849 055

ERGON. ENERGY

© COPYRIGHT 2002 ERGON ENERGY
Ergon Energy Corporation Limited
ABN 50 087 646 062

HARD COPY UNCONTROLLED

		Date
Approved Ergon	J. Brooks	14/10/10
Approved Energex	R. English	14/10/10
Checked	D. Taylor / B. Oyegoke	14/10/10
Drawn	L. Burton / T. Borg	01/10/10

LIGHTING
ASSEMBLIES
SL32A LABEL
FOR SERVICE FUSE

EE DRWG NO: 1-2-875
EGX DRWG NO: 10500-A4-1-2-875

VOLUME	FOLDER	PAGE	ISSUE
1	2	875	0A

MATERIAL

ENERGEX SC	QTY 876-1	ERGON SC
15885	1 / 1	2402333

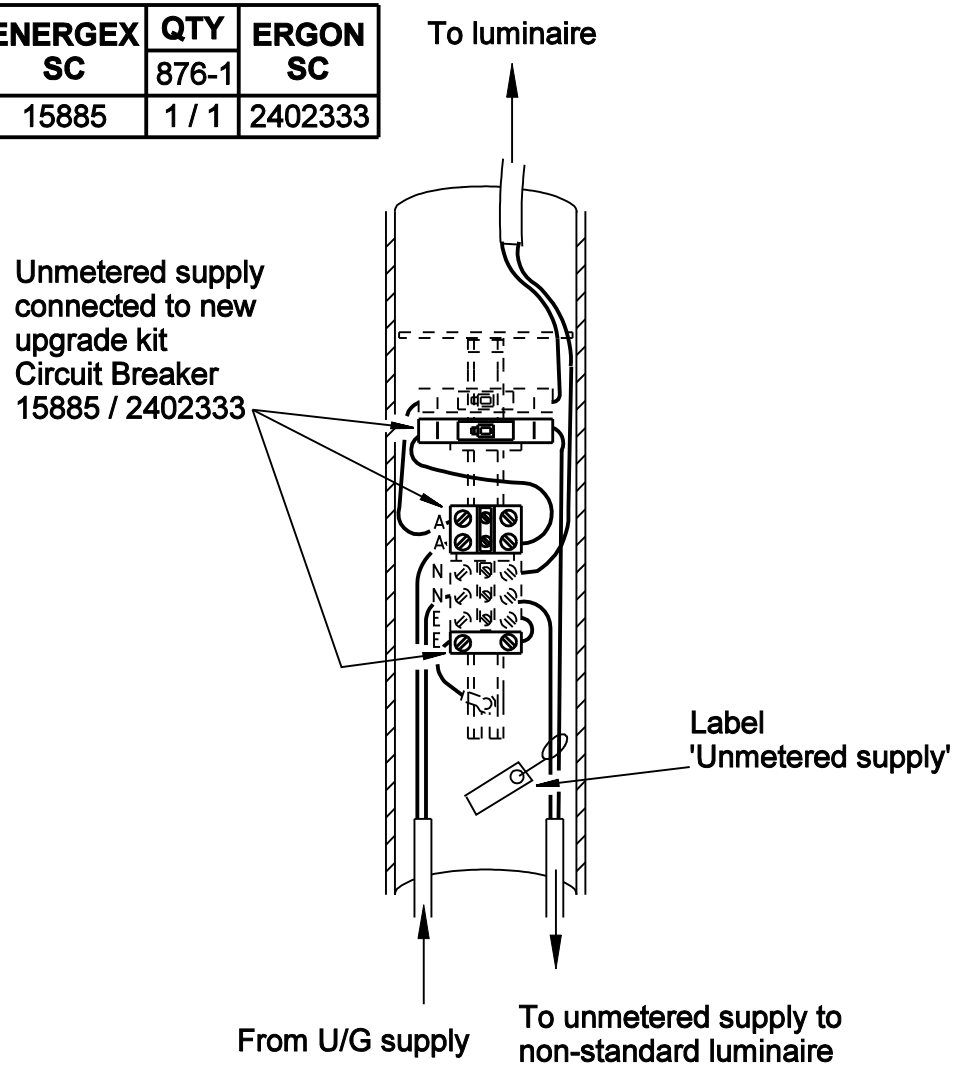

ASSEMBLY 876-1 UNMETERED SUPPLY FROM PUBLIC LIGHT POLE

A	ORIGINAL ISSUE	REFERENCE DRAWING ENERGEX: 4927-A4-2.26,2.27	energex	ERGON. ENERGY	Approved Ergon: J. Brooks — Date: 14/10/10	LIGHTING
		REFERENCE DRAWING ERGON: NIL			Approved Energex: R. English — Date: 14/10/10	ASSEMBLIES
					Checked: D. Taylor / B. Oyegoke — Date: 14/10/10	ALTERNATE UNMETERED SUPPLY FROM PUBLIC LIGHT POLE - TERMINAL PANEL
		This document must not be reproduced in part or whole without written permission from ENERGEX or Ergon Energy	© COPYRIGHT 2002 ENERGEX ENERGEX Corporation Limited ABN 40 078 849 055	© COPYRIGHT 2002 ERGON ENERGY Ergon Energy Corporation Limited ABN 50 087 646 062	Drawn: L. Burton / T. Borg — Date: 01/10/10	EE DRWG NO: 1-2-876
			HARD COPY UNCONTROLLED			EGX DRWG NO: 10500-A4-1-2-876

VOLUME	FOLDER	PAGE	ISSUE
1	2	876	0A

MATERIAL

ENERGEX SC	QTY 880-1	ERGON SC
05957	AR / -	NIL
05958	AR / -	NIL
05959	AR / -	NIL
05960	AR / -	NIL
05961	AR / -	NIL
05962	AR / -	NIL
05963	AR / -	NIL
05964	AR / -	NIL
05965	AR / -	NIL
05950	AR / -	NIL
11430	2 / -	NIL
03910	AR / -	NIL

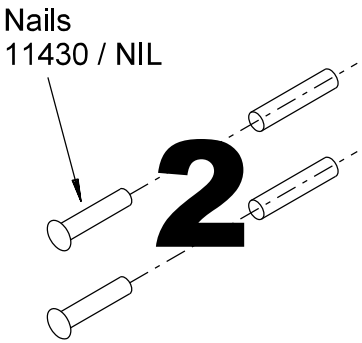

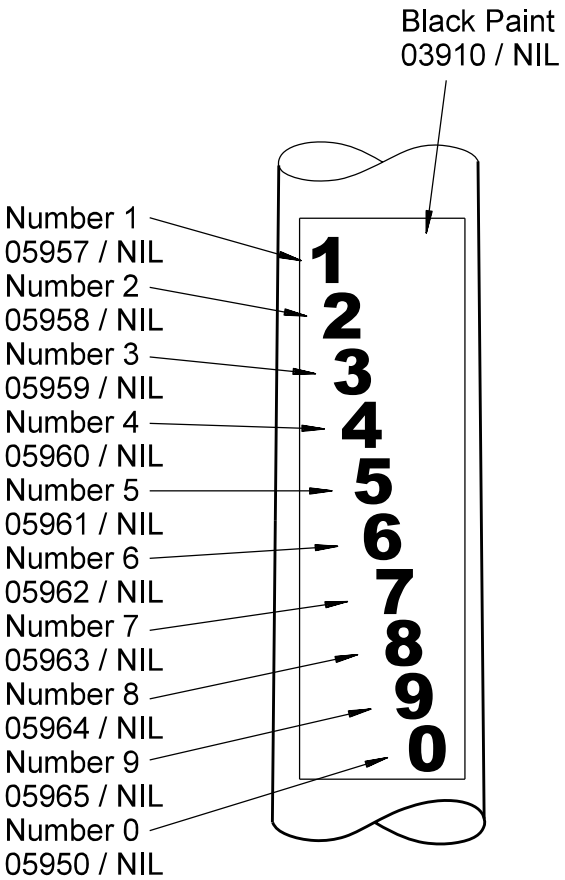

ASSEMBLY 880-1 WOOD POLE NUMBERING

MATERIAL

ENERGEX SC	QTY 880-2	QTY 880-3	ERGON SC
15820	AR / -	AR / -	NIL
15821	AR / -	AR / -	NIL
15822	AR / -	AR / -	NIL
15823	AR / -	AR / -	NIL
15824	AR / -	AR / -	NIL
15825	AR / -	AR / -	NIL
15826	AR / -	AR / -	NIL
15827	AR / -	AR / -	NIL
15819	AR / -	AR / -	NIL
02477	2 / -	NIL	NIL
11685	1 / -	NIL	NIL
02481	2 / -	NIL	NIL

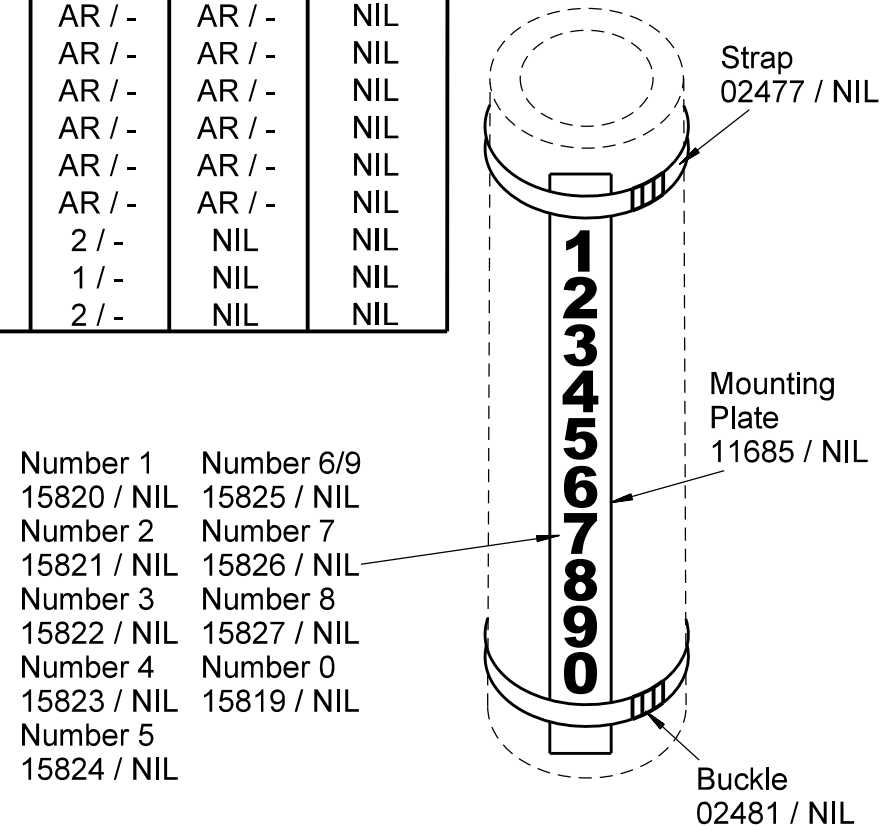

ASSEMBLY 880-2 CONCRETE POLE NUMBERING
ASSEMBLY 880-3 STEEL POLE NUMBERING

A	ORIGINAL ISSUE	REFERENCE DRAWING ENERGEX: 4927-A4-6.9	energex	Approved Ergon: C. Noel	Date: 21/03/14
B	12.02.14	REFERENCE DRAWING ERGON: NIL	ERGON ENERGY	Approved Energex: F. Zaini	Date: 21/03/14
		This document must not be reproduced in part or whole without written permission from ENERGEX or Ergon Energy	© COPYRIGHT 2002 ENERGEX ENERGEX Corporation Limited ABN 40 078 849 055	Checked: P. Relf / A. Bletchly	Date: 21/03/14
			© COPYRIGHT 2002 ERGON ENERGY Ergon Energy Corporation Limited ABN 50 087 646 062	Drawn: L. Burton / T. Borg	Date: 01/10/10
			HARD COPY UNCONTROLLED		

LIGHTING
ASSEMBLIES - ENERGEX ONLY
EGX POLE ID NUMBERS
WOOD CONCRETE AND STEEL

EE DRWG NO: 1-2-880	VOLUME	FOLDER	PAGE	ISSUE
EGX DRWG NO: 10500-A4-1-2-880	1	2	880	0B

MATERIAL

ENERGEX SC	QTY 883-1	ERGON SC
15885 07112	1 / 1 AR	2402333 2403244

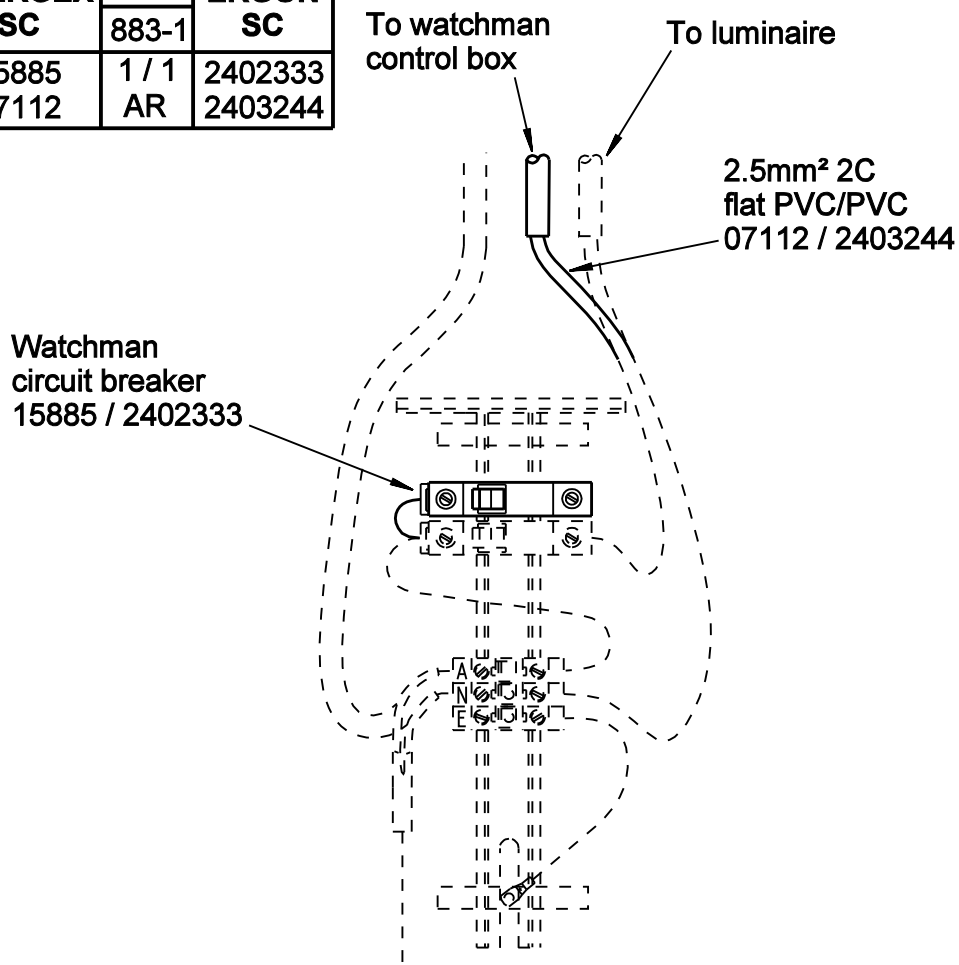

ASSEMBLY 883-1 WATCHMAN FLOODLIGHT CIRCUIT BREAKER

A	ORIGINAL ISSUE	REFERENCE DRAWING ENERGEX: 4927-A4-15.3 REFERENCE DRAWING ERGON: NIL	energex © COPYRIGHT 2002 ENERGEX ENERGEX Corporation Limited ABN 40 078 849 055	ERGON. ENERGY © COPYRIGHT 2002 ERGON ENERGY Ergon Energy Corporation Limited ABN 50 087 646 062	Approved Ergon: J. Brooks, Date: 14/10/10 Approved Energex: R. English, Date: 14/10/10 Checked: D. Taylor / B. Oyegoke, Date: 14/10/10 Drawn: L. Burton / T. Borg, Date: 01/10/10

This document must not be reproduced in part or whole without written permission from ENERGEX or Ergon Energy

HARD COPY UNCONTROLLED

LIGHTING
ASSEMBLIES
WATCHMAN FLOODLIGHT CIRCUIT BREAKER

EE DRWG NO: 1-2-883	VOLUME	FOLDER	PAGE	ISSUE
EGX DRWG NO: 10500-A4-1-2-883	1	2	883	0A

MATERIAL

ENERGEX SC	QTY 884-1	ERGON SC
17131	1 / -	NIL

Consumer's Property
Pole Label
17131 / NIL

CONSUMER'S

PROPERTY POLE

ASSEMBLY 884-1 CONSUMER'S PROPERTY POLE LABEL

A	ORIGINAL ISSUE

REFERENCE DRAWING ENERGEX: NIL

REFERENCE DRAWING ERGON: NIL

This document must not be reproduced in part or whole without written permission from ENERGEX or Ergon Energy

energex

© COPYRIGHT 2002 ENERGEX
ENERGEX Corporation Limited
ABN 40 078 849 055

ERGON. ENERGY

© COPYRIGHT 2002 ERGON ENERGY
Ergon Energy Corporation Limited
ABN 50 087 646 062

HARD COPY UNCONTROLLED

		Date
Approved Ergon	J. Brooks	14/10/10
Approved Energex	R. English	14/10/10
Checked	D. Taylor / B. Oyegoke	14/10/10
Drawn	L. Burton / T. Borg	14/10/10

LIGHTING
ASSEMBLIES
CONSUMER'S PROPERTY POLE LABEL

EE DRWG NO: 1-2-884
EGX DRWG NO: 10500-A4-1-2-884

VOLUME	FOLDER	PAGE	ISSUE
1	2	884	0A

MATERIAL

ENERGEX SC	QTY			ERGON SC
	890-3	890-6	890-9	
17876	1 / -			NIL
17873		1 / -		NIL
17879			1 / -	NIL

Luminaire

S70 - 17876 / NIL (Green)
S70 - 17873 / NIL (Black)
S70 - 17879 / NIL (Blue/Grey)

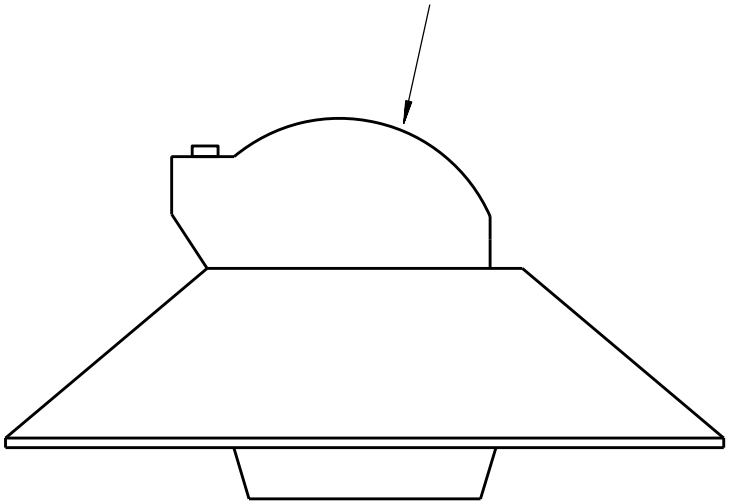

ASSEMBLY 890-3 LUMINAIRE S70 NOSTALGIA TYPE 2 GREEN (No bracket)
ASSEMBLY 890-6 LUMINAIRE S70 NOSTALGIA TYPE 2 BLACK (No bracket)
ASSEMBLY 890-9 LUMINAIRE S70 NOSTALGIA TYPE 2 BLUE / GREY (No bracket)

Notes

1. Luminaires are supplied complete with lamp and PE cell fitted.
2. PE Cell assembly 901-1 and lamp assembly 902-1 are provided for maintenance spares.

A	ORIGINAL ISSUE	
B	06.01.14	
C	15.04.18	

REFERENCE DRAWING ENERGEX: 4927-A4-6.9

REFERENCE DRAWING ERGON: NIL

This document must not be reproduced in part or whole without written permission from ENERGEX or Ergon Energy

energex

© COPYRIGHT 2002 ENERGEX
ENERGEX Corporation Limited
ABN 40 078 849 055

ERGON ENERGY

© COPYRIGHT 2002 ERGON ENERGY
Ergon Energy Corporation Limited
ABN 50 087 646 062

HARD COPY UNCONTROLLED

		Date
Approved Ergon	C. Noel	01/05/18
Approved Energex	F. Zaini	01/05/18
Checked	P. Relf / A. Bletchly	01/05/18
Drawn	L. Burton / T. Borg	01/10/10

LIGHTING

ASSEMBLIES - ENERGEX ONLY
MINOR ROAD NOSTALGIA TYPE 2 LUMINAIRE
WITHOUT BRACKET - GREEN, BLACK & BLUE / GREY

EE DRWG NO: 1-2-890
EGX DRWG NO: 10500-A4-1-2-890

VOLUME	FOLDER	PAGE	ISSUE
1	2	890	0C

MATERIAL

ENERGEX SC	QTY 891-1	ERGON SC
15675	1 / -	NIL

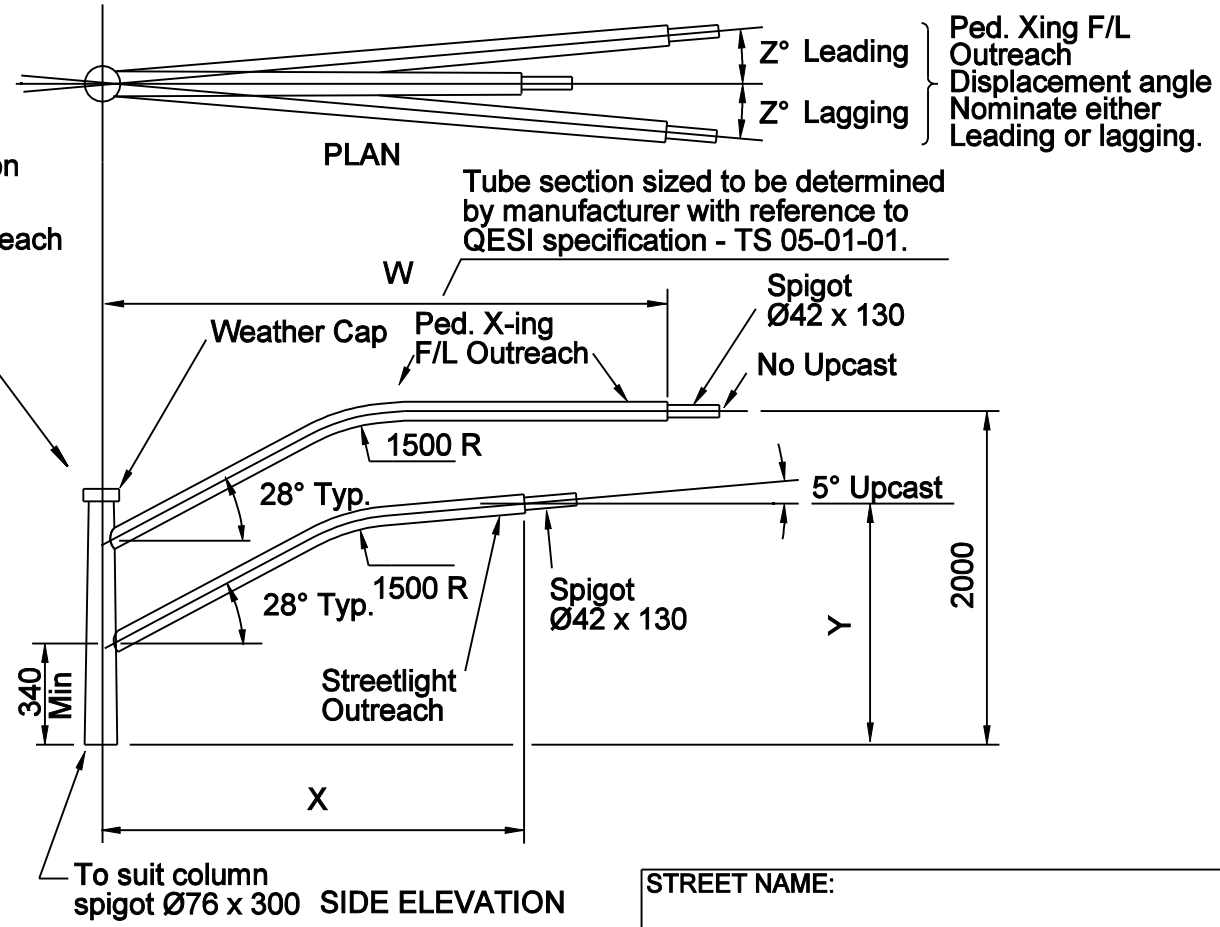

NOTES:

1. Each outreach will be required to support a luminaire of up to 20kg mass with a projected area in the vertical plane of up to 0.27m²
2. Outreaches manufactured generally in accordance with Drawing No 8152A1
3. All dimensions are in millimetres
4. Following assignment of the displacement angle Z (leading or lagging), the maximum vector sum of both outreaches (X+W) must not exceed 5000mm
5. Dimensions W,X & Y should be taken from, and in increments of 500mm

PED XING F/L OUTREACH	W	
STREET LIGHT OUTREACH	X	
PED. XING F/L OUTREACH	Y	
DISPLACEMENT ANGLE	Z°	

STREET NAME:	
LOCATION:	STATION No:
REFERENCE No:	DRAWING No:

ASSEMBLY 891-1 MAJOR ROAD PEDESTRIAN OUTREACH ARM PF1

A	ORIGINAL ISSUE

REFERENCE DRAWING ENERGEX: NIL

REFERENCE DRAWING ERGON: NIL

This document must not be reproduced in part or whole without written permission from ENERGEX or Ergon Energy

energex

© COPYRIGHT 2002 ENERGEX
ENERGEX Corporation Limited
ABN 40 078 849 055

ERGON. ENERGY

© COPYRIGHT 2002 ERGON ENERGY
Ergon Energy Corporation Limited
ABN 50 087 646 062

HARD COPY UNCONTROLLED

		Date
Approved Ergon	J. Brooks	14/10/10
Approved Energex	R. English	14/10/10
Checked	D. Taylor / B. Oyegoke	14/10/10
Drawn	L. Burton / T. Borg	01/10/10

LIGHTING

ASSEMBLIES - ENERGEX ONLY
COMBINED OUTREACH PF1 FOR PEDESTRIAN CROSSING & STREET LIGHT COMBINATIONS

EE DRWG NO: 1-2-891
EGX DRWG NO: 10500-A4-1-2-891

VOLUME	FOLDER	PAGE	ISSUE
1	2	891	0A

MATERIAL

ENERGEX SC	QTY 892-1	ERGON SC
15674	1 / -	NIL

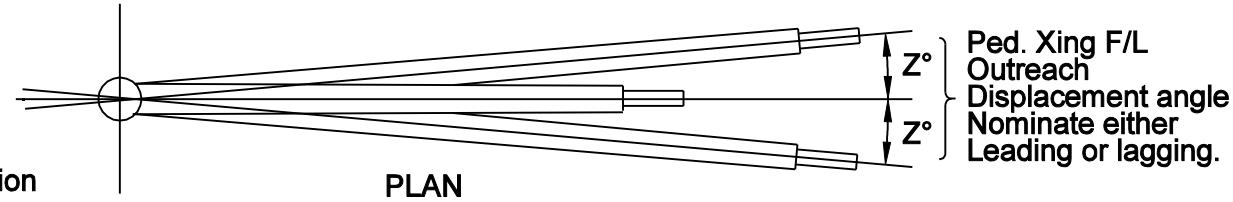

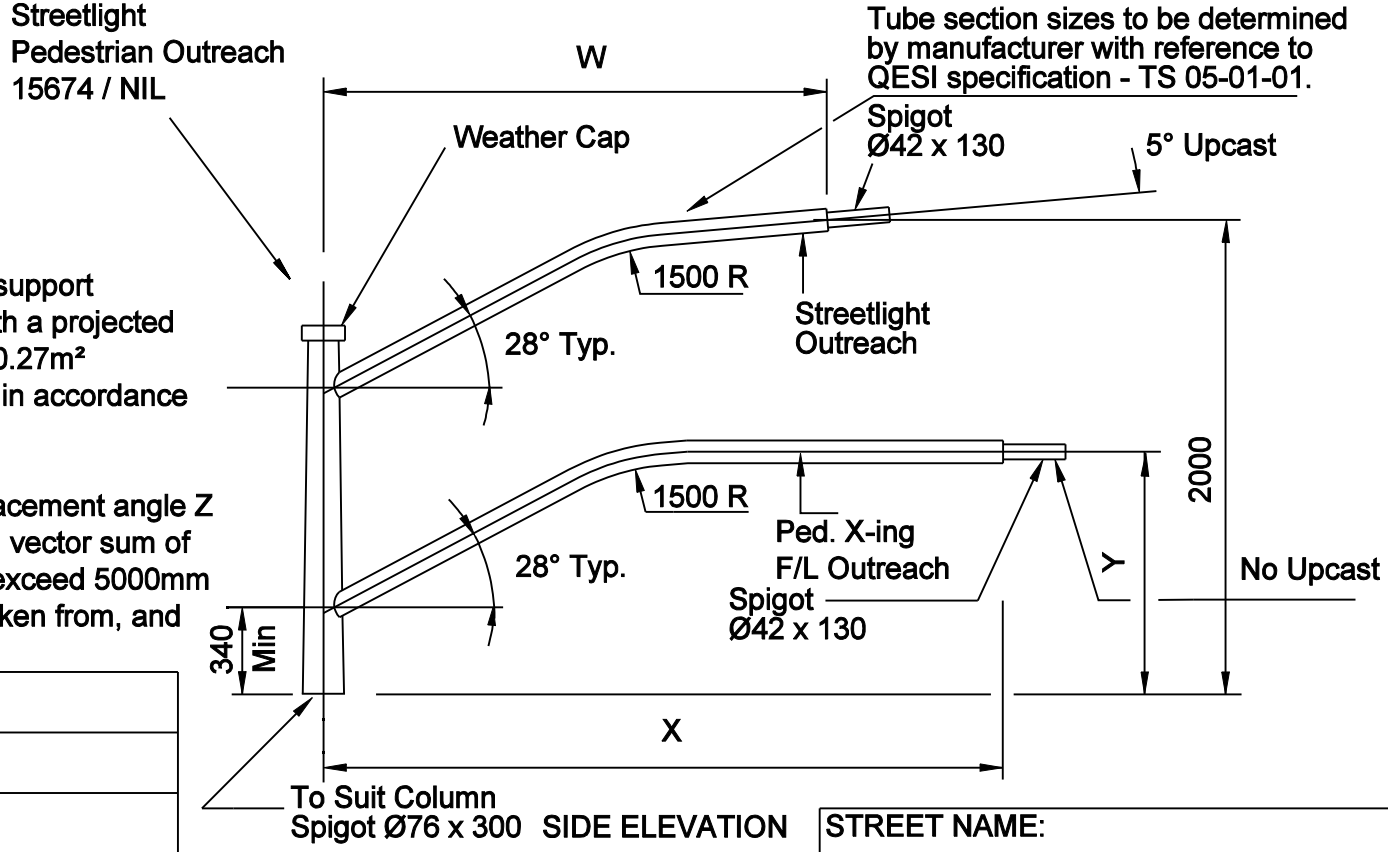

NOTES:

1. Each outreach will be required to support a luminaire of up to 20kg mass with a projected area in the vertical plane of up to 0.27m²
2. Outreach manufactured generally in accordance with Drawing No. 8152A1.
3. All dimensions are in millimetres
4. Following assignment of the displacement angle Z (leading or lagging), the maximum vector sum of both outreaches (X+W) must not exceed 5000mm
5. Dimensions W,X & Y should be taken from, and in increments of 500mm

STREET LIGHT OUTREACH	W	
PED. XING F/L OUTREACH	X	
PED. XING F/L O/R UPLIFT	Y	
DISPLACEMENT ANGLE	Z°	

STREET NAME:	
LOCATION:	
PROJECT No. & DRAWING No:	STATION No:

ASSEMBLY 892-1 MAJOR ROAD PEDESTRIAN OUTREACH ARM PF2

A	ORIGINAL ISSUE

REFERENCE DRAWING ENERGEX: NIL

REFERENCE DRAWING ERGON: NIL

This document must not be reproduced in part or whole without written permission from ENERGEX or Ergon Energy

energex

© COPYRIGHT 2002 ENERGEX
ENERGEX Corporation Limited
ABN 40 078 849 055

ERGON. ENERGY

© COPYRIGHT 2002 ERGON ENERGY
Ergon Energy Corporation Limited
ABN 50 087 646 062

HARD COPY UNCONTROLLED

		Date
Approved Ergon	J. Brooks	14/10/10
Approved Energex	R. English	14/10/10
Checked	D. Taylor / B. Oyegoke	14/10/10
Drawn	L. Burton / T. Borg	01/10/10

LIGHTING
ASSEMBLIES - ENERGEX ONLY
COMBINED OUTREACH PF2 FOR PEDESTRIAN CROSSING & STREET LIGHT COMBINATIONS

EE DRWG NO: 1-2-892
EGX DRWG NO: 10500-A4-1-2-892

VOLUME	FOLDER	PAGE	ISSUE
1	2	892	0A

MATERIAL

ENERGEX SC	QTY 893-1	ERGON SC
15676	1 / -	NIL

PED. XING F/L OUTREACH	W	
PED. XING F/L OUTREACH	X	
PED. XING F/L OUTREACH O/R UPLIFT	Y	
DISPLACEMENT ANGLE	Z°	

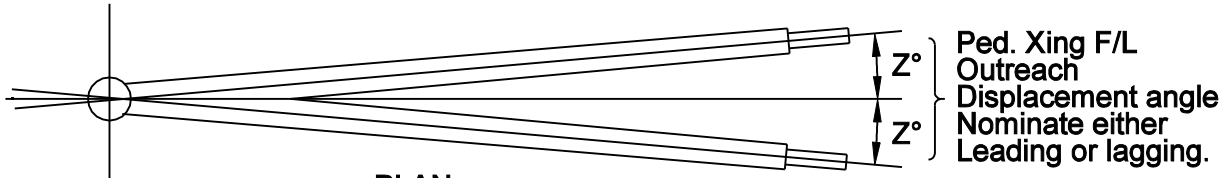

PLAN

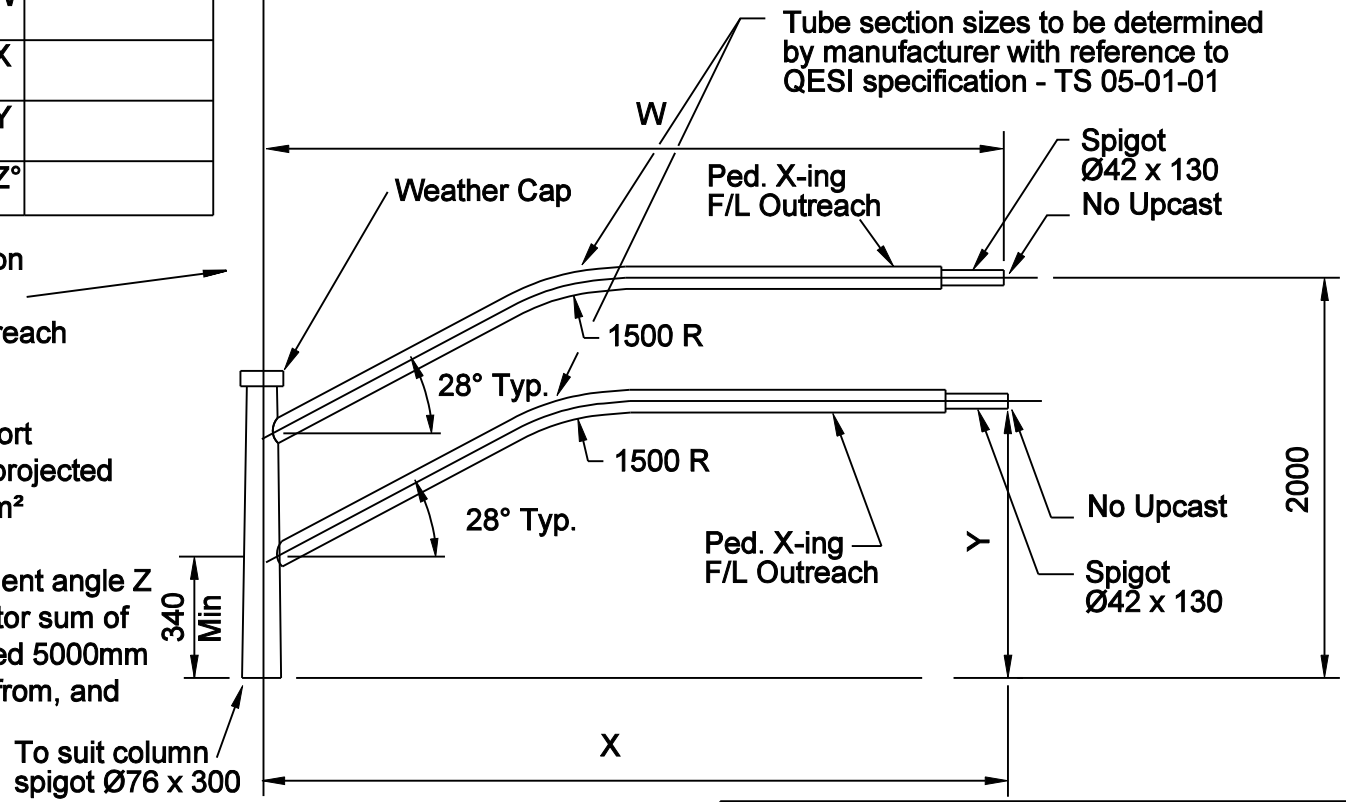

SIDE ELEVATION

NOTES:

1. Each outreach will be required to support a luminaire of up to 20kg mass with a projected area in the vertical plane of up to 0.27m²
2. All dimensions are in millimetres
3. Following assignment of the displacement angle Z (leading or lagging), the maximum vector sum of both outreaches (X+W) must not exceed 5000mm
4. Dimensions W,X & Y should be taken from, and in increments of 500mm

STREET NAME:	
LOCATION:	STATION No:
REFERENCE No:	DRAWING No:

ASSEMBLY 893-1 MAJOR ROAD PEDESTRIAN OUTREACH ARM PF3

A	ORIGINAL ISSUE	REFERENCE DRAWING ENERGEX: NIL	energex	ERGON. ENERGY	Approved Ergon: J. Brooks, Date: 14/10/10
		REFERENCE DRAWING ERGON: NIL	© COPYRIGHT 2002 ENERGEX ENERGEX Corporation Limited ABN 40 078 849 055	© COPYRIGHT 2002 ERGON ENERGY Ergon Energy Corporation Limited ABN 50 087 646 062	Approved Energex: R. English, Date: 14/10/10
		This document must not be reproduced in part or whole without written permission from ENERGEX or Ergon Energy	HARD COPY UNCONTROLLED		Checked: D. Taylor / B. Oyegoke, Date: 14/10/10
					Drawn: L. Burton / T. Borg, Date: 01/10/10

LIGHTING
ASSEMBLIES - ENERGEX ONLY
COMBINED OUTREACH PF3 FOR PEDESTRIAN CROSSING COMBINATIONS

EE DRWG NO: 1-2-893	VOLUME	FOLDER	PAGE	ISSUE
EGX DRWG NO: 10500-A4-1-2-893	1	2	893	0A

MATERIAL

ENERGEX SC	QTY 894-1	ERGON SC
15672	1 / -	NIL

NOTES:

1. All dimensions are in millimetres
2. Minor luminaire spigot = Ø34 x 100 long
   Major luminaire spigot = Ø42 x 130 long
3. Maximum allowable outreach "X" is 5000mm
   Maximum allowable uplift "Y" is 2000mm
4. Spigot upcast $\alpha°$ = 0° (typical) for PX floodlight and 5° (typical) for streetlight

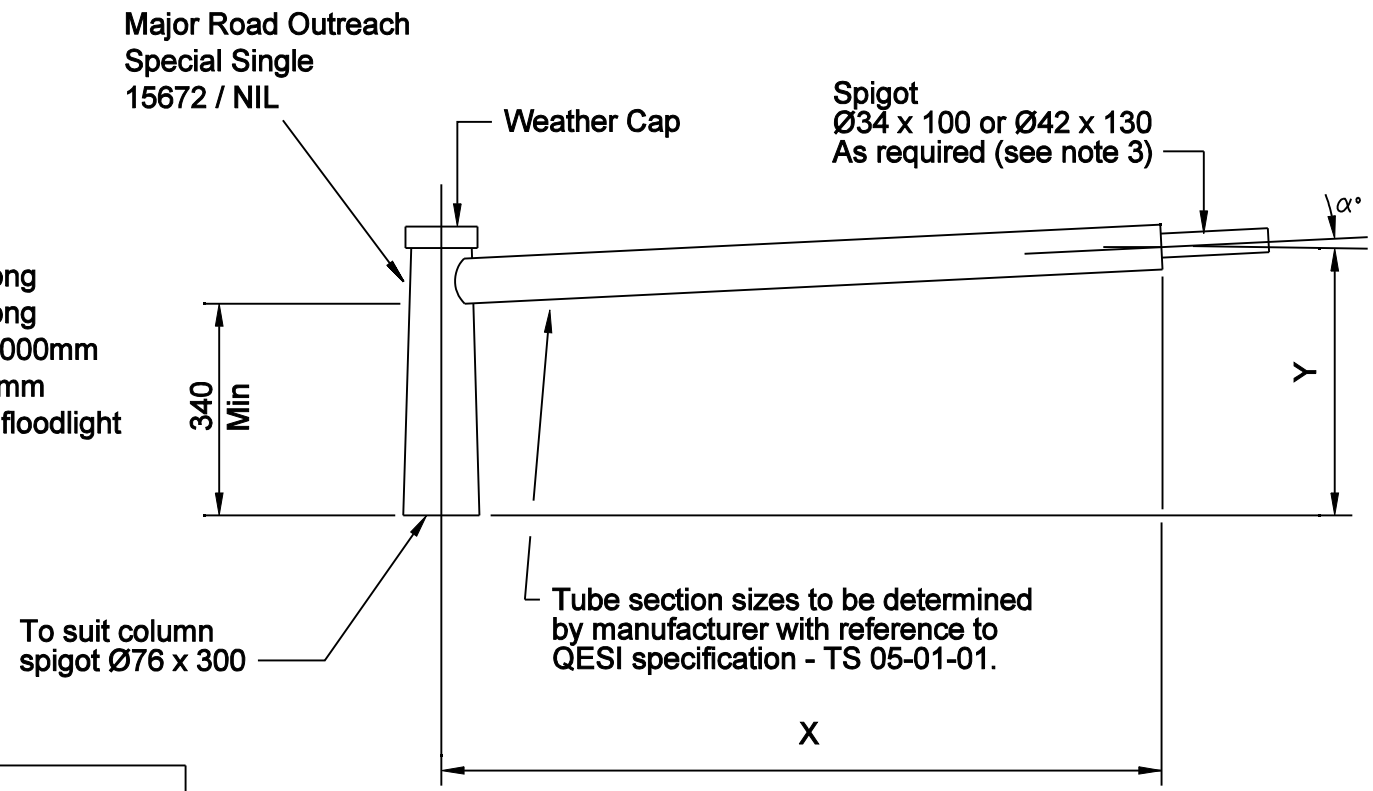

SIDE ELEVATION

STREET NAME:	
LOCATION:	
PROJECT No. & DRAWING No:	STATION No:

See Notes 4 & 5

OUTREACH	X	mm
UPLIFT	Y	mm
SPIGOT UPCAST	$\alpha°$	°

ASSEMBLY 894-1 MAJOR ROAD OUTREACH SPECIAL SINGLE

A	ORIGINAL ISSUE

REFERENCE DRAWING ENERGEX: NIL

REFERENCE DRAWING ERGON: NIL

This document must not be reproduced in part or whole without written permission from ENERGEX or Ergon Energy

energex

© COPYRIGHT 2002 ENERGEX
ENERGEX Corporation Limited
ABN 40 078 849 055

ERGON. ENERGY

© COPYRIGHT 2002 ERGON ENERGY
Ergon Energy Corporation Limited
ABN 50 087 646 062

HARD COPY UNCONTROLLED

		Date
Approved Ergon	J. Brooks	14/10/10
Approved Energex	R. English	14/10/10
Checked	D. Taylor / B. Oyegoke	14/10/10
Drawn	L. Burton / T. Borg	01/10/10

LIGHTING
ASSEMBLIES - ENERGEX ONLY
MAJOR ROAD OUTREACH ARMS
SPECIAL SINGLE

EE DRWG NO: 1-2-894
EGX DRWG NO: 10500-A4-1-2-894

VOLUME	FOLDER	PAGE	ISSUE
1	2	894	0A

MATERIAL

ENERGEX SC	QTY 895-1	ERGON SC
15673	1 / -	NIL

NOTES:

1. Each outreach will be required to support a luminaire of up to 20kg mass with a projected area in the vertical plane of up to 0.27m²
2. Outreaches manufactured generally in accordance with Drawing No. 8152A1.
3. All dimensions are in millimetres
4. Maximum allowable outreach "X" is 5000mm Maximum allowable uplift "Y" is 2000mm
5. Following assignment of the displacement angle Z (leading or lagging), the maximum vector sum of both outreaches (Y1+Y2) must not exceed 5000mm
6. Dimensions Y1,X1 & X2,Y2 should be taken from, and in increments of 500mm

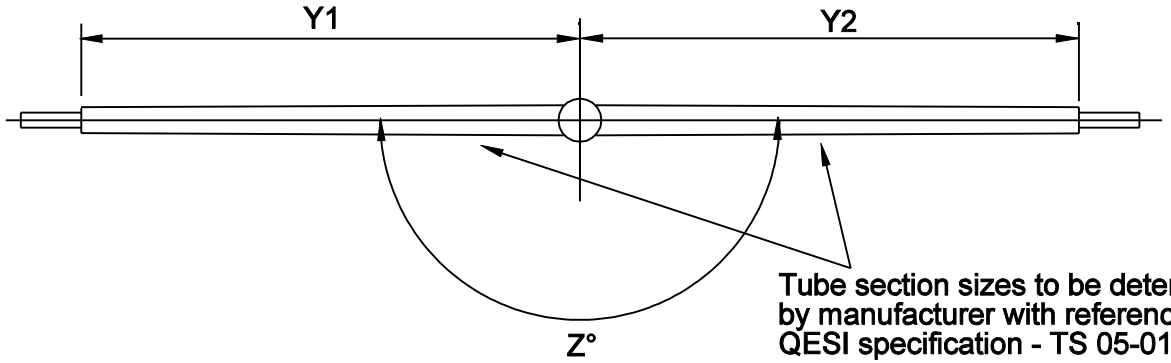

Tube section sizes to be determined by manufacturer with reference to QESI specification - TS 05-01-01

PLAN

Major Road Outreach
Special Dual
15673 / NIL

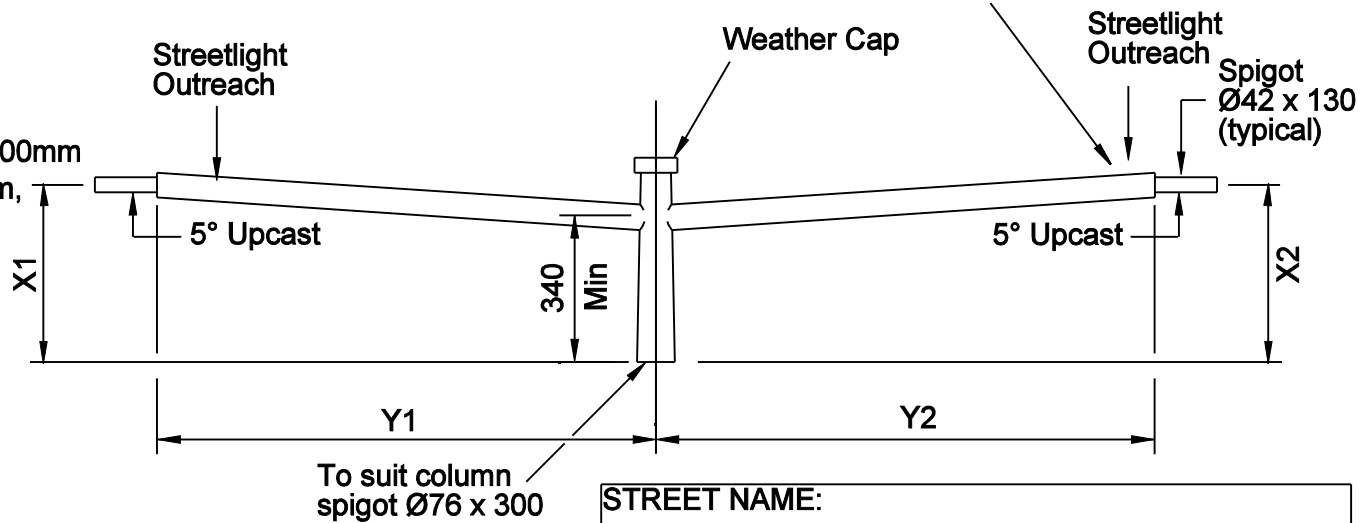

SIDE ELEVATION

See Note 4

UPLIFT	X1	
UPLIFT	X2	
OUTREACH	Y1	
OUTREACH	Y2	
DISPLACEMENT ANGLE	Z°	

STREET NAME:	
LOCATION:	STATION Nos:
REFERENCE No:	DRAWING No:

ASSEMBLY 895-1 MAJOR ROAD OUTREACH SPECIAL DUAL

A	ORIGINAL ISSUE

REFERENCE DRAWING ENERGEX: NIL

REFERENCE DRAWING ERGON: NIL

This document must not be reproduced in part or whole without written permission from ENERGEX or Ergon Energy

energex

© COPYRIGHT 2002 ENERGEX
ENERGEX Corporation Limited
ABN 40 078 849 055

ERGON. ENERGY

© COPYRIGHT 2002 ERGON ENERGY
Ergon Energy Corporation Limited
ABN 50 087 646 062

HARD COPY UNCONTROLLED

		Date
Approved Ergon	J. Brooks	14/10/10
Approved Energex	R. English	14/10/10
Checked	D. Taylor / B. Oyegoke	14/10/10
Drawn	L. Burton / T. Borg	01/10/10

LIGHTING
ASSEMBLIES - ENERGEX ONLY
MAJOR ROAD OUTREACH ARMS
SPECIAL DUAL

EE DRWG NO: 1-2-895
EGX DRWG NO: 10500-A4-1-2-895

VOLUME	FOLDER	PAGE	ISSUE
1	2	895	0A

MATERIAL

ENERGEX SC	QTY 896-1	ERGON SC
16283	1 / -	NIL

NOTES:

1. Outreaches manufactured generally in accordance with Drawing No 4861A2.
2. All dimensions are in millimetres

OUTREACH X	
UPLIFT ANGLE	5°

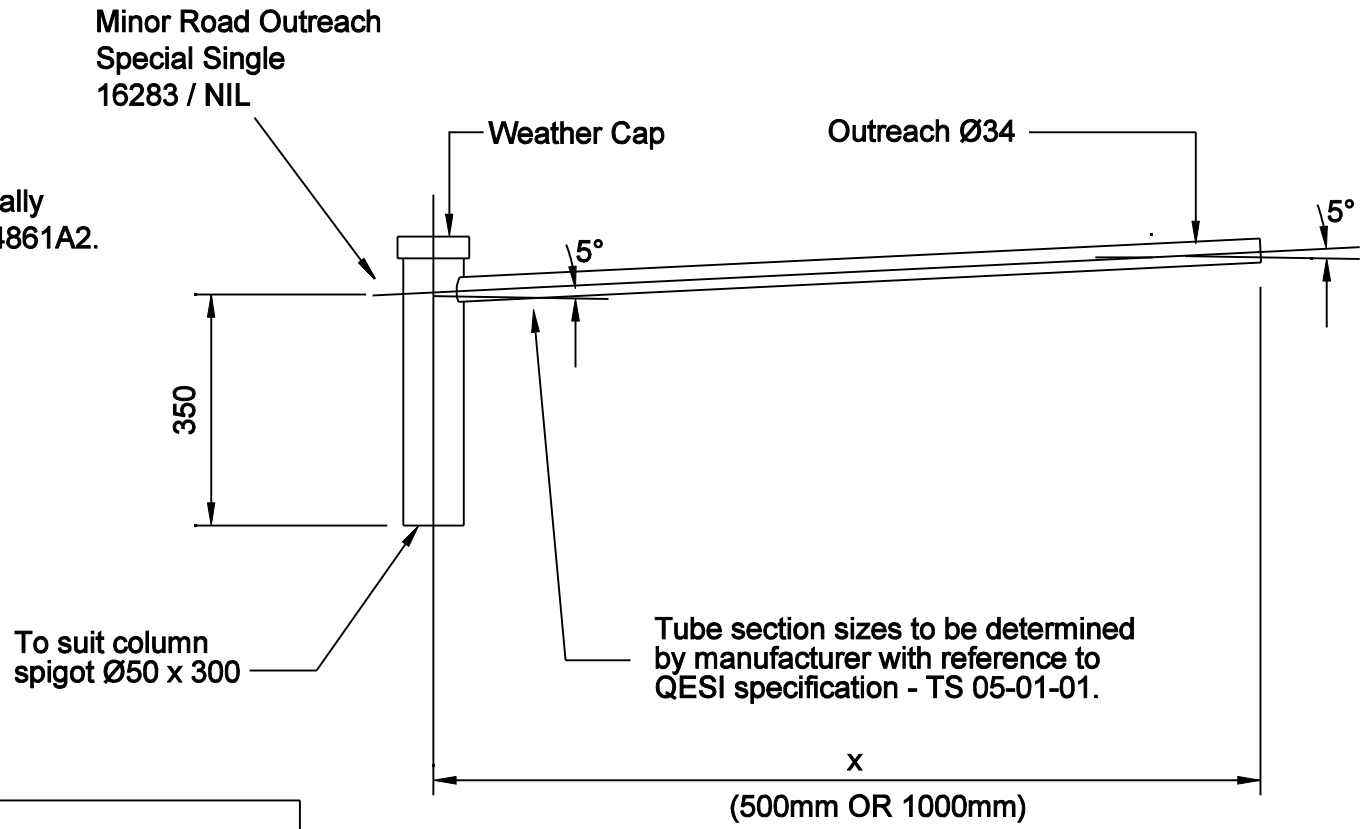

STREET NAME:	
LOCATION:	STATION No:
REFERENCE No:	DRAWING No:

SIDE ELEVATION

ASSEMBLY 896-1 MINOR ROAD OUTREACH SPECIAL SINGLE

A	ORIGINAL ISSUE

REFERENCE DRAWING ENERGEX: NIL

REFERENCE DRAWING ERGON: NIL

This document must not be reproduced in part or whole without written permission from ENERGEX or Ergon Energy

energex

© COPYRIGHT 2002 ENERGEX
ENERGEX Corporation Limited
ABN 40 078 849 055

ERGON. ENERGY

© COPYRIGHT 2002 ERGON ENERGY
Ergon Energy Corporation Limited
ABN 50 087 646 062

HARD COPY UNCONTROLLED

		Date
Approved Ergon	J. Brooks	dd/mm/yy
Approved Energex	R. English	dd/mm/yy
Checked	D. Taylor / B. Oyegoke	dd/mm/yy
Drawn	L. Burton / T. Borg	dd/mm/yy

LIGHTING
ASSEMBLIES - ENERGEX ONLY
MINOR ROAD OUTREACH ARMS
SPECIAL SINGLE

EE DRWG NO: 1-2-896
EGX DRWG NO: 10500-A4-1-2-896

VOLUME	FOLDER	PAGE	ISSUE
1	2	896	0A

MATERIAL

ENERGEX SC	QTY 897-1	ERGON SC
06909	2 / -	NIL

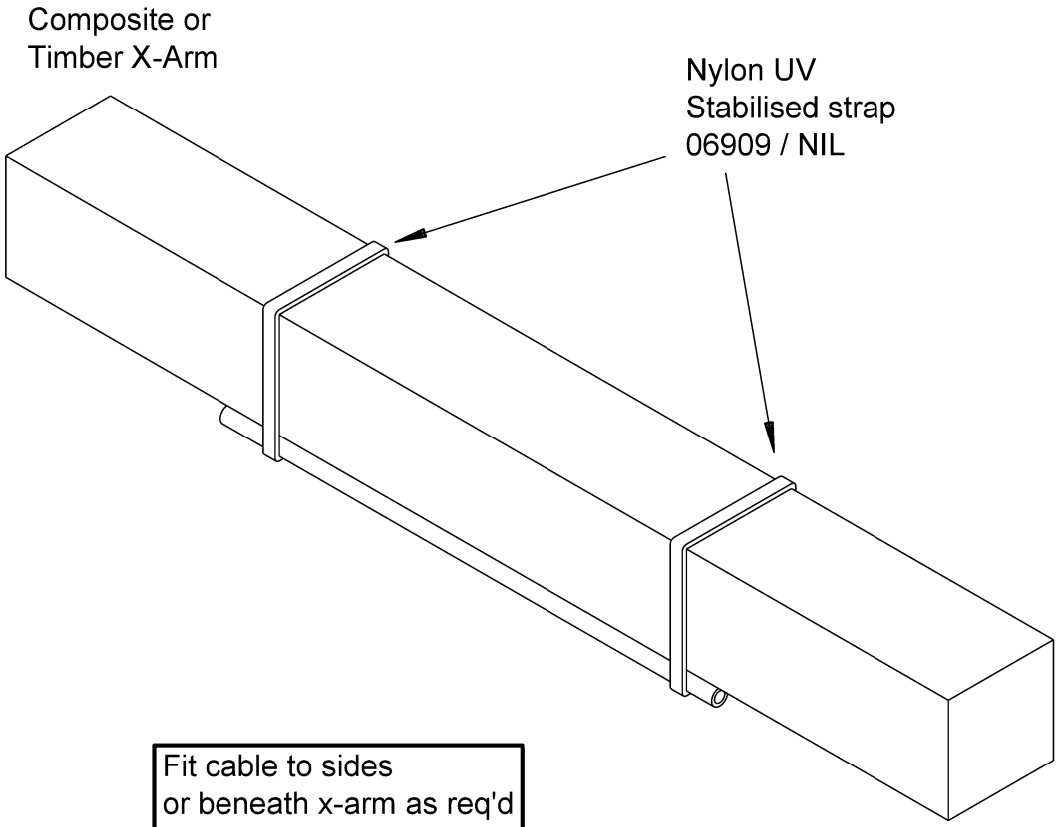

"L" brackets (12466) may be used as an alternative arrangement on timber x-arms only

Fit cable to sides
or beneath x-arm as req'd
Cut off excess strap

ASSEMBLY 897-1 CABLE TO CROSSARM

A	ORIGINAL ISSUE	REFERENCE DRAWING ENERGEX: NIL	energex	ERGON ENERGY	Approved Ergon: C. Noel, Date: 21/03/14	**LIGHTING** ASSEMBLIES - ENERGEX ONLY CABLE TO CROSSARM
B	20.03.14	REFERENCE DRAWING ERGON: NIL	© COPYRIGHT 2002 ENERGEX ENERGEX Corporation Limited ABN 40 078 849 055	© COPYRIGHT 2002 ERGON ENERGY Ergon Energy Corporation Limited ABN 50 087 646 062	Approved Energex: F. Zaini, Date: 21/03/14	
		This document must not be reproduced in part or whole without written permission from ENERGEX or Ergon Energy	HARD COPY UNCONTROLLED		Checked: P. Relf / A. Bletchly, Date: 21/03/14	
					Drawn: L. Burton / T. Borg, Date: 30/09/10	

EE DRWG NO: 1-2-897	VOLUME	FOLDER	PAGE	ISSUE
EGX DRWG NO: 10500-A4-1-2-897	1	2	897	0B

MATERIAL

ENERGEX SC	QTY		ERGON SC
	898-1	898-2	
17638	1 / -	1 / -	NIL
13166		1 / -	NIL

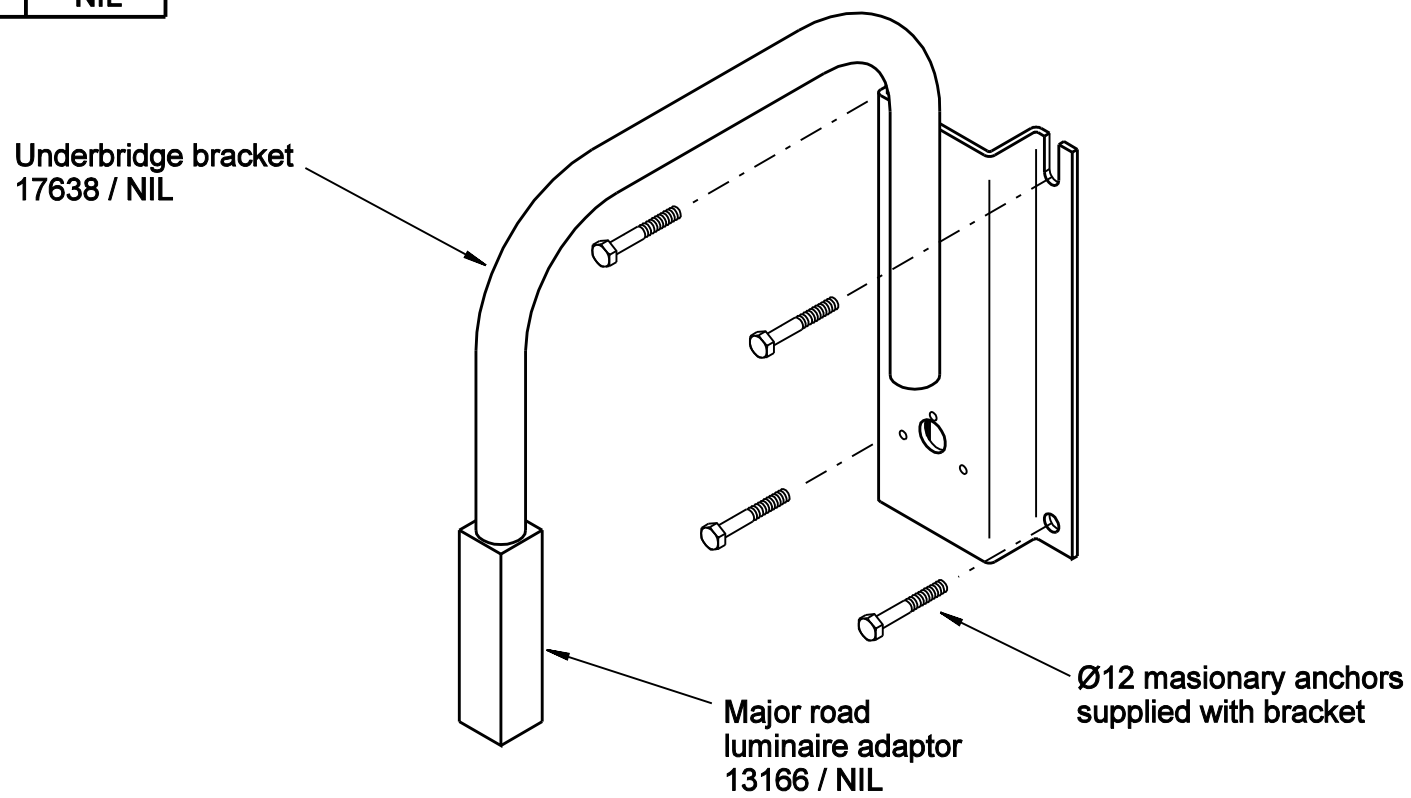

ASSEMBLY 898-1 MINOR ROAD UNDERBRIDGE BRACKET

ASSEMBLY 898-2 MAJOR ROAD UNDERBRIDGE BRACKET

A	ORIGINAL ISSUE	REFERENCE DRAWING ENERGEX: NIL	energex	ERGON. ENERGY	Approved Ergon: J. Brooks — Date: 14/10/10
		REFERENCE DRAWING ERGON: NIL	© COPYRIGHT 2002 ENERGEX ENERGEX Corporation Limited ABN 40 078 849 055	©COPYRIGHT 2002 ERGON ENERGY Ergon Energy Corporation Limited ABN 50 087 646 062	Approved Energex: R. English — Date: 14/10/10
		This document must not be reproduced in part or whole without written permission from ENERGEX or Ergon Energy	HARD COPY UNCONTROLLED		Checked: D. Taylor / B. Oyegoke — Date: 14/10/10
					Drawn: L. Burton / T. Borg — Date: 01/10/10

LIGHTING
ASSEMBLIES - ENERGEX ONLY
MINOR / MAJOR ROAD
UNDERBRIDGE BRACKET

EE DRWG NO: 1-2-898	VOLUME	FOLDER	PAGE	ISSUE
EGX DRWG NO: 10500-A4-1-2-898	1	2	898	0A

MATERIAL

ENERGEX SC	QTY 899-1	ERGON SC
15421	1 / -	NIL

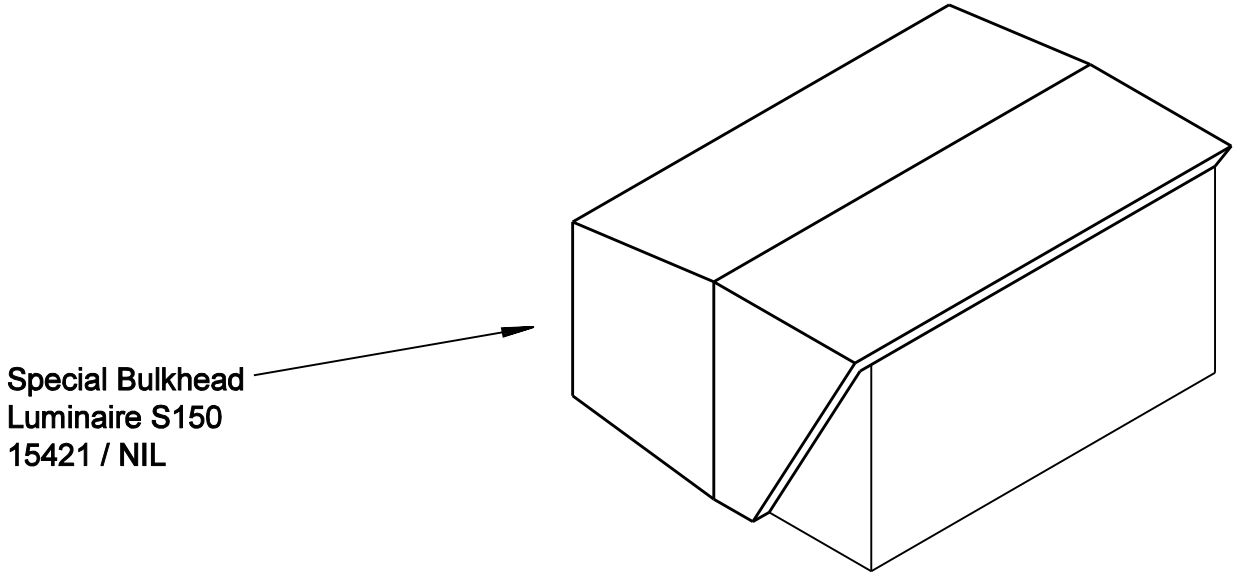

ASSEMBLY 899-1 SPECIAL BULKHEAD S150

A	ORIGINAL ISSUE	REFERENCE DRAWING ENERGEX: 4927-A4-2.45	energex	ERGON. ENERGY	Approved Ergon: J. Brooks — Date: 14/10/10
		REFERENCE DRAWING ERGON: NIL	© COPYRIGHT 2002 ENERGEX ENERGEX Corporation Limited ABN 40 078 849 055	© COPYRIGHT 2002 ERGON ENERGY Ergon Energy Corporation Limited ABN 50 087 646 062	Approved Energex: R. English — Date: 14/10/10
		This document must not be reproduced in part or whole without written permission from ENERGEX or Ergon Energy	HARD COPY UNCONTROLLED		Checked: D. Taylor / B. Oyegoke — Date: 14/10/10
					Drawn: L. Burton / T. Borg — Date: 01/10/10

LIGHTING
ASSEMBLIES - ENERGEX ONLY
SPECIAL BULKHEAD LUMINAIRE S150

EE DRWG NO: 1-2-899
EGX DRWG NO: 10500-A4-1-2-899

VOLUME	FOLDER	PAGE	ISSUE
1	2	899	0A

MATERIAL

Assy	Description	QTY	ENERGEX SC	ERGON SC
900-1	MINOR ROAD LUMINAIRE LINEAR FLUORESCENT 2 x 14 T5	1 / -	21200	NIL
900-2	MINOR ROAD LUMINAIRE LINEAR FLUORESCENT 2 x 24 T5	1 / 1	21227	2438190

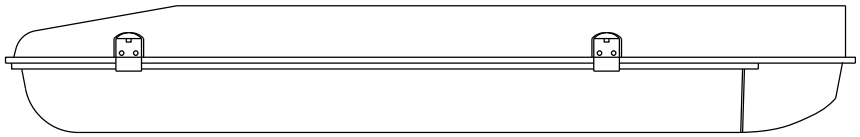

Luminaire
LF 214
21200 / NIL
LF 224
21227 / 2438190

Notes

1. Luminaires are supplied complete with lamp and PE cell fitted.
2. PE Cell assembly 901 and lamp assembly 902 are provided for maintenance spares.

A	ORIGINAL ISSUE	REFERENCE DRAWING ENERGEX: NIL	energex	ERGON ENERGY	Approved Ergon: C. Noel — Date: 24/04/13
		REFERENCE DRAWING ERGON: NIL			Approved Energex: F. Zaini — Date: 24/04/13
					Checked: P. Relf / A. Bletchly — Date: 04/04/13
					Drawn: L. Burton / T. Borg — Date: 09/01/13

This document must not be reproduced in part or whole without written permission from ENERGEX or Ergon Energy

© COPYRIGHT 2002 ENERGEX
ENERGEX Corporation Limited
ABN 40 078 849 055

© COPYRIGHT 2002 ERGON ENERGY
Ergon Energy Corporation Limited
ABN 50 087 646 062

HARD COPY UNCONTROLLED

LIGHTING
ASSEMBLIES
MINOR ROAD LINEAR FLUORESCENT LUMINAIRE

EE DRWG NO: 1-2-900
EGX DRWG NO: 10500-A4-1-2-900

VOLUME	FOLDER	PAGE	ISSUE
1	2	900	0A

MATERIAL

Assy	Description	QTY	ENERGEX SC	ERGON SC
901-1	PE CELL - D-2, LOW RATING	1 / 1	05503	1175094
901-2	PE CELL - NEMA, HIGH RATING	1 / 1	05502	1184026

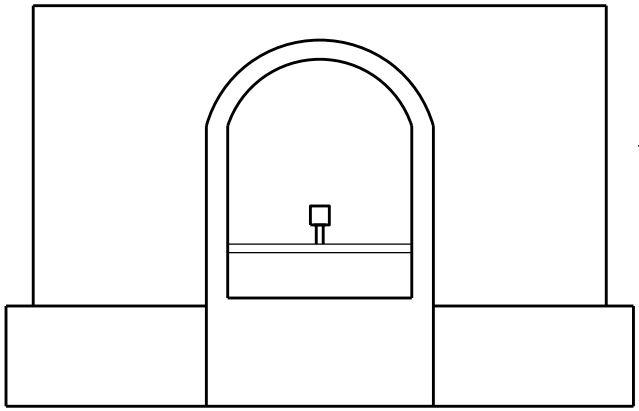

NEMA, High Rating
05502 / 1184026

D-2, Low Rating
05503 / 1175094

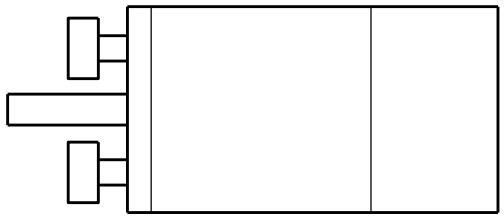

Notes

1. Luminaires are supplied complete with lamp and PE cell fitted.
2. These assemblies are provided for maintenance spares.

ASSEMBLY 901-1 PE CELL - D-2, LOW RATING

ASSEMBLY 901-2 PE CELL - NEMA, HIGH RATING

A	ORIGINAL ISSUE	REFERENCE DRAWING ENERGEX: NIL	energex	Approved Ergon: C. Noel, Date: 24/04/13	**LIGHTING** ASSEMBLIES PE CELL
		REFERENCE DRAWING ERGON: NIL		Approved Energex: F. Zaini, Date: 24/04/13	
				Checked: P. Relf / A. Bletchly, Date: 04/04/13	
				Drawn: L. Burton / T. Borg, Date: 20/02/13	

This document must not be reproduced in part or whole without written permission from ENERGEX or Ergon Energy

© COPYRIGHT 2002 ENERGEX
ENERGEX Corporation Limited
ABN 40 078 849 055

© COPYRIGHT 2002 ERGON ENERGY
Ergon Energy Corporation Limited
ABN 50 087 646 062

HARD COPY UNCONTROLLED

EE DRWG NO: 1-2-901	VOLUME	FOLDER	PAGE	ISSUE
EGX DRWG NO: 10500-A4-1-2-901	1	2	901	0A

MATERIAL

Assy	Description	QTY	ENERGEX SC	ERGON SC
902-1	Lamp - High Pressure Sodium - S70	1	13469	2405832
902-2	Lamp - High Pressure Sodium - S100	1	13471	2403341
902-3	Lamp - High Pressure Sodium - S150	1	05268	1141598
902-4	Lamp - High Pressure Sodium - S250	1	05270	1141599
902-5	Lamp - High Pressure Sodium - S400	1	05273	1141639
902-6	Lamp - Mercury Vapour - M50	1	05239	1140819
902-7	Lamp - Mercury Vapour - M80	1	05241	1140823
902-22	Lamp - Mercury Vapour - M125	1	05243	1140827
902-23	Lamp - Mercury Vapour - M250	1	05244	1140843
902-24	Lamp - Mercury Vapour - M400	1	05247	1140851
902-8	Lamp - Metal Halide - H35	1	22798	2438109
902-9	Lamp - Metal Halide - H70	1	22677	2438117
902-10	Lamp - Metal Halide - H150	1	22676	2433357
902-11	Lamp - Metal Halide - H250	1	22434	2433365
902-12	Lamp - Metal Halide - H400	1	22435	2405798
902-14	Lamp - Compact Fluorescent - CF32	1	21223	2438141
902-16	Lamp - Linear Fluorescent - LF14	1	20843	NIL
902-17	Lamp - Linear Fluorescent - LF24	1	21228	2438133
902-18	Lamp - Linear Fluorescent - LF36	1	05234	1140339
902-19	Lamp - Metal Halide - H100	1	22678	2438125

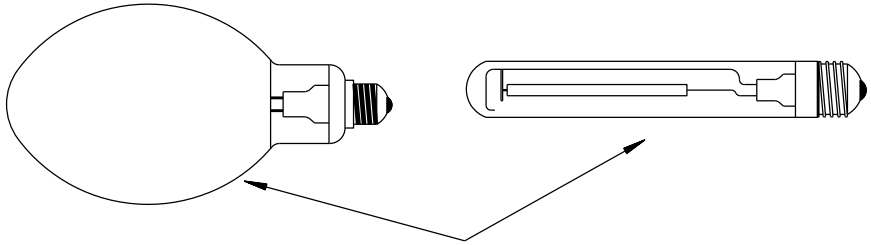

Lamp, High Density Discharge
High Pressure Sodium
S70 13469 / 2405832 (Diffuse Bulb)
S100 13471 / 2403341 (Clear Tube)
S150 05268 / 1141598 (Clear Tube)
S250 05270 / 1141599 (Clear Tube)
S400 05273 / 1141639 (Clear Tube)

Mercury Vapour
M50 05239 / 1140819 (Diffuse Bulb)
M80 05241 / 1140823 (Diffuse Bulb)
M125 05243 / 1140827 (Diffuse Bulb)
M250 05244 / 1140843 (Diffuse Bulb)
M400 05247 / 1140851 (Diffuse Bulb)

Metal Halide
H35 22798 / 2438109 (Clear Tube)
H70 22677 / 2438117 (Clear Tube)
H100 22678 / 2438125 (Clear Tube)
H150 22676 / 2433357 (Clear Tube)
H250 22434 / 2433365 (Clear Tube)
H400 22435 / 2405798 (Clear Tube)

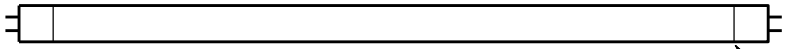

Lamp, Linear Fluorescent
LF 214 20843 / -
LF 224 21228 / 2438133
LF 236 05234 / 1140339

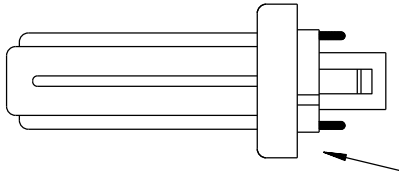

Lamp, Compact Fluorescent
CF32 21223 / 2438141

Notes
1. Luminaires are supplied complete with lamp and PE cell fitted.
2. These assemblies are provided for maintenance spares.

A	ORIGINAL ISSUE	REFERENCE DRAWING ENERGEX: NIL	energex	ERGON ENERGY	Approved Ergon: C. Noel 01/05/18
B	07.01.13				Approved Energex: F. Zaini 01/05/18
C	31.10.16	REFERENCE DRAWING ERGON: NIL			Checked: P. Relf / A. Bletchly 01/05/18
D	22.03.18				Drawn: L. Burton / T. Borg 22/02/13

This document must not be reproduced in part or whole without written permission from ENERGEX or Ergon Energy

© COPYRIGHT 2002 ENERGEX
ENERGEX Corporation Limited
ABN 40 078 849 055

©COPYRIGHT 2002 ERGON ENERGY
Ergon Energy Corporation Limited
ABN 50 087 646 062

HARD COPY UNCONTROLLED

LIGHTING
ASSEMBLIES
LAMPS

EE DRWG NO: 1-2-902	VOLUME	FOLDER	PAGE	ISSUE
EGX DRWG NO: 10500-A4-1-2-902	1	2	902	0D

MATERIAL

ENERGEX SC	QTY	ERGON SC
NIL	- / 1	2422996

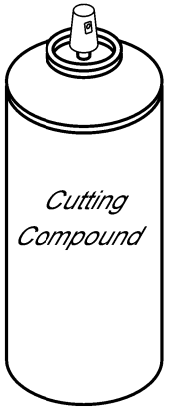

Cutting compound
Nil / 2422996

ASSEMBLY 903-1 CUTTING COMPOUND FOR STEEL POLE

MATERIAL

ENERGEX SC	QTY	ERGON SC
NIL	- / 1	2444347

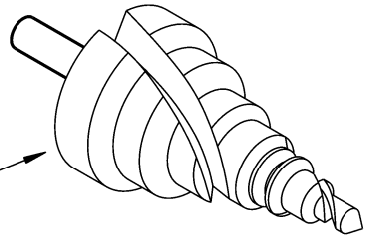

Step Drill
5 - 35mm
Nil / 2444347

ASSEMBLY 903-10 STEP DRILL 5 - 35mm

MATERIAL

ENERGEX SC	QTY	ERGON SC
16431	1 / 1	2404375

Cold galvanising paint
16431 / 2404375

ASSEMBLY 903-5 COLD GALVANISING PAINT

A	ORIGINAL ISSUE	REFERENCE DRAWING ENERGEX: NIL	energex	ERGON ENERGY	Approved Ergon: C. Noel	Date: 21/03/14
B	20.03.14	REFERENCE DRAWING ERGON: NIL	© COPYRIGHT 2002 ENERGEX Corporation Limited ABN 40 078 849 055	© COPYRIGHT 2002 ERGON ENERGY Ergon Energy Corporation Limited ABN 50 087 646 062	Approved Energex: F. Zaini	Date: 21/03/14
		This document must not be reproduced in part or whole without written permission from ENERGEX or Ergon Energy	HARD COPY UNCONTROLLED		Checked: P. Relf / A. Bletchly	Date: 21/03/14
					Drawn: L. Burton / T. Borg	Date: 19/03/13

LIGHTING
ASSEMBLIES
CUTTING COMPOUND / COLD GALVANISING /
STEP DRILL & PLASTIC PLUGS FOR STEEL POLE

EE DRWG NO: 1-2-901	VOLUME	FOLDER	PAGE	ISSUE
EGX DRWG NO: 10500-A4-1-2-901	1	2	903	0B

MATERIAL

ENERGEX SC	QTY	ERGON SC
NIL	- / 1	0104728
NIL	- / 2	0104435
NIL	- / 1	1011106
NIL	- / AR	0184880
NIL	- / 2	1015016

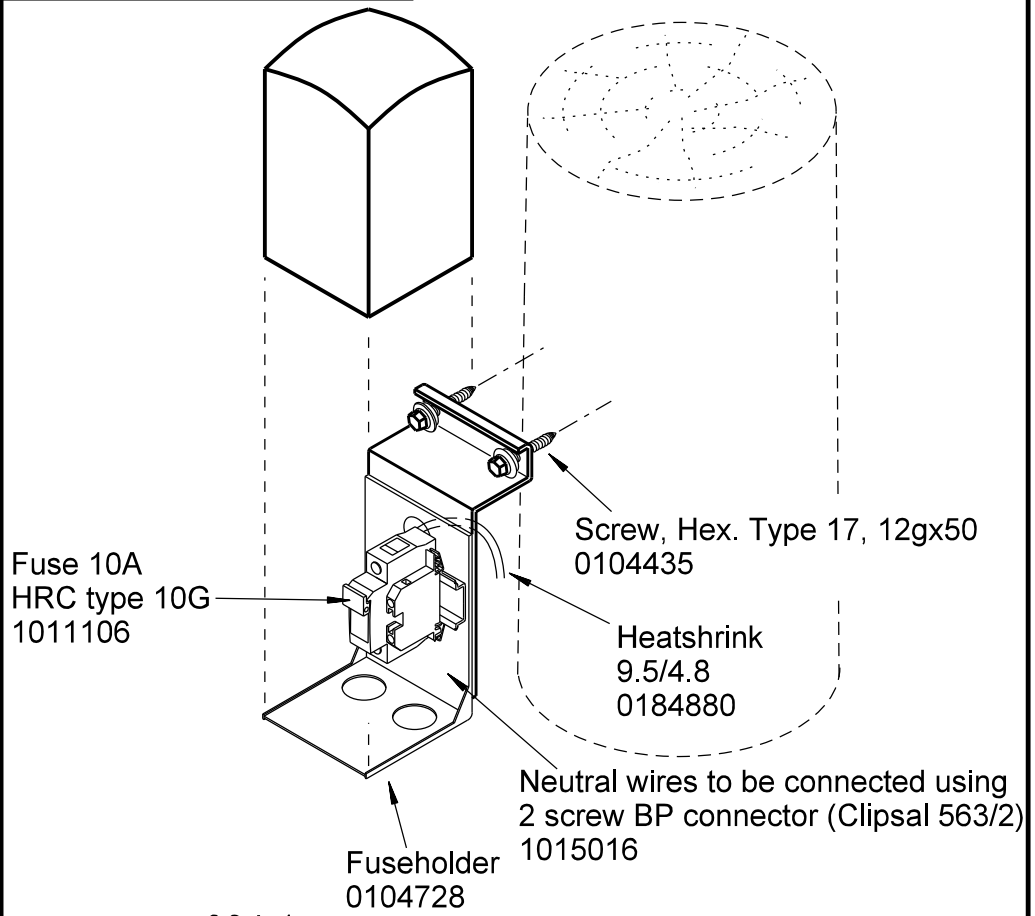

ASSEMBLY 904-1 FUSEHOLDER TO WOOD POLE

MATERIAL

ENERGEX SC	QTY	ERGON SC
NIL	- / 1	2403146
NIL	- / 2	0104435

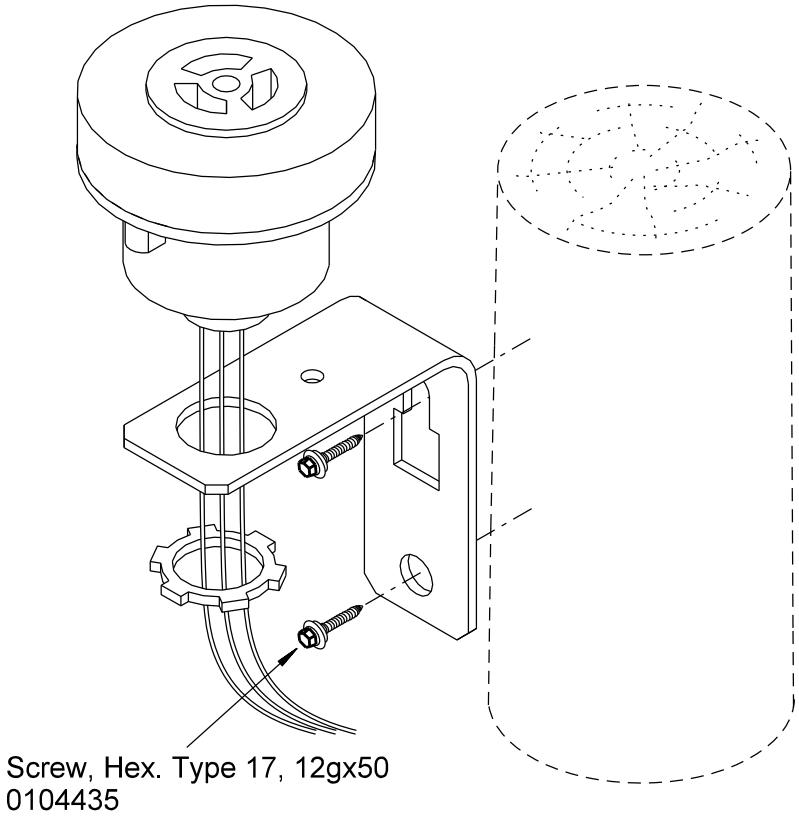

ASSEMBLY 904-5 BRACKET, HOLDER FOR PE CELL

A	ORIGINAL ISSUE	REFERENCE DRAWING ENERGEX: NIL	energex	ERGON ENERGY	Approved Ergon: C. Noel	Date: 01/05/18
B	22.03.18	REFERENCE DRAWING ERGON: NIL	© COPYRIGHT 2002 ENERGEX ENERGEX Corporation Limited ABN 40 078 849 055	© COPYRIGHT 2002 ERGON ENERGY Ergon Energy Corporation Limited ABN 50 087 646 062	Approved Energex: F. Zaini	Date: 01/05/18
		This document must not be reproduced in part or whole without written permission from ENERGEX or Ergon Energy	HARD COPY UNCONTROLLED		Checked: P. Relf / A. Bletchly	Date: 01/05/18
					Drawn: L. Burton / T. Borg	Date: 14/11/14

LIGHTING
ASSEMBLIES - ERGON ENERGY ONLY
FUSEHOLDER & PE CELL HOLDER BRACKET TO POLE

EE DRWG NO: 1-2-904	VOLUME	FOLDER	PAGE	ISSUE
EGX DRWG NO: 10500-A4-1-2-904	1	2	904	0B

MATERIAL

ENERGEX SC	QTY	ERGON SC
NIL	- / 4	0104406
NIL	- / AR	0406297
NIL	- / 2	0406311
NIL	- / 4	1779110

DIRECT PURCHASE

ITEM	QTY
Set screw M8 x 20mm S/S	4
LORA control box	1
Mounting bracket for LORA	1

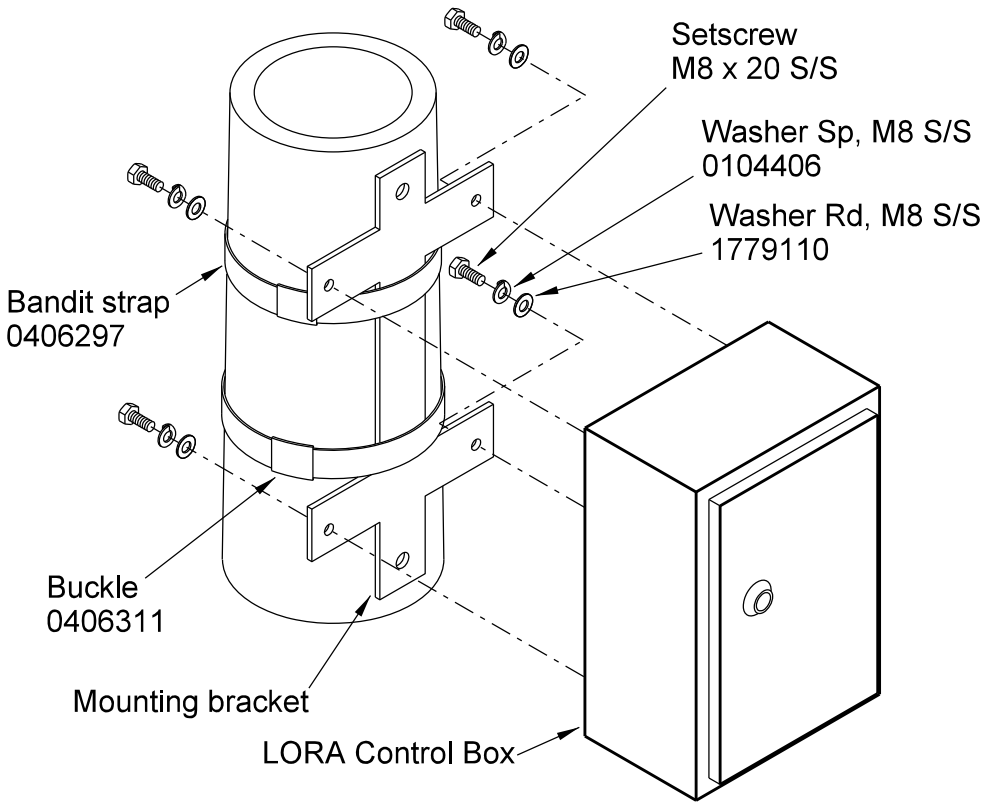

ASSEMBLY 905-2 LORA CONTROL BOX TO STEEL POLE

DIRECT PURCHASE

ITEM	QTY
SMD8-90 Antenna	1
Antenna mounting bracket	1

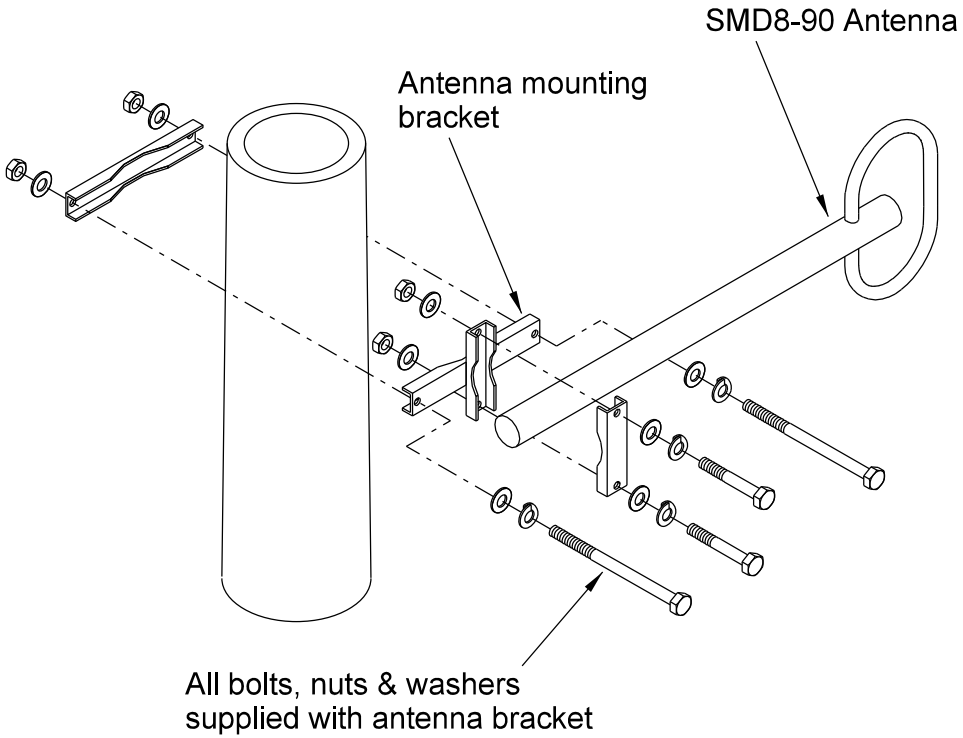

ASSEMBLY 905-5 ANTENNA TO STEEL POLE

A	ORIGINAL ISSUE	REFERENCE DRAWING ENERGEX: NIL	energex	ERGON ENERGY	Approved Ergon: C. Noel — Date: 19/04/17
		REFERENCE DRAWING ERGON: NIL	© COPYRIGHT 2002 ENERGEX ENERGEX Corporation Limited ABN 40 078 849 055	© COPYRIGHT 2002 ERGON ENERGY Ergon Energy Corporation Limited ABN 50 087 646 062	Approved Energex: F. Zaini — Date: 19/04/17
		This document must not be reproduced in part or whole without written permission from ENERGEX or Ergon Energy	HARD COPY UNCONTROLLED		Checked: P. Relf / A. Bletchly — Date: 01/04/17
					Drawn: L. Burton / T. Borg — Date: 18/07/16

LIGHTING
ASSEMBLIES - ERGON ENERGY ONLY
LORA CONTROL BOX TO STEEL POLE
ANTENNA TO STEEL POLE

EE DRWG NO: 1-2-905	VOLUME	FOLDER	PAGE	ISSUE
EGX DRWG NO: Nil	1	2	905	0A

MATERIAL

ENERGEX SC	QTY	ERGON SC
02476 02483	4m / 4m 2 / 2	0406297 0406311

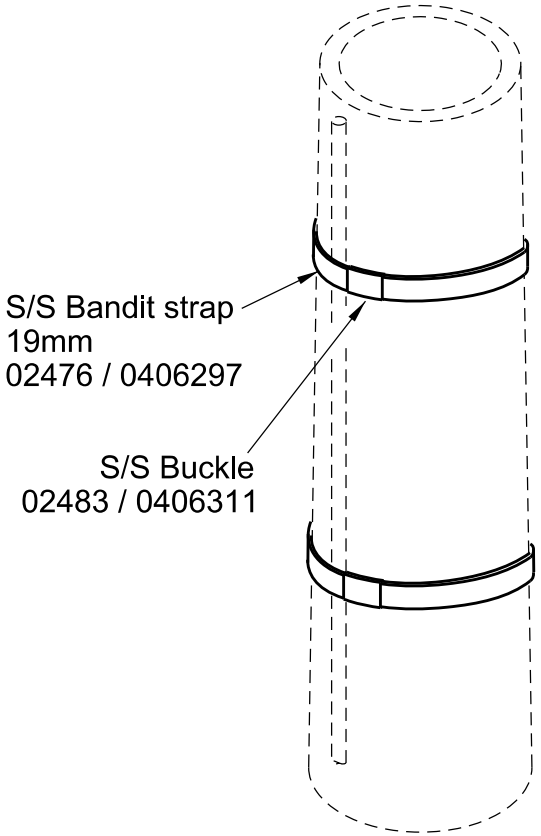

ASSEMBLY 906-2 BANDIT STRAP (19mm) TO POLE

MATERIAL

I.I. No.	QTY
0406297 0406311	4m 3

DIRECT PURCHASE

ITEM	QTY
Metal cable guard	1

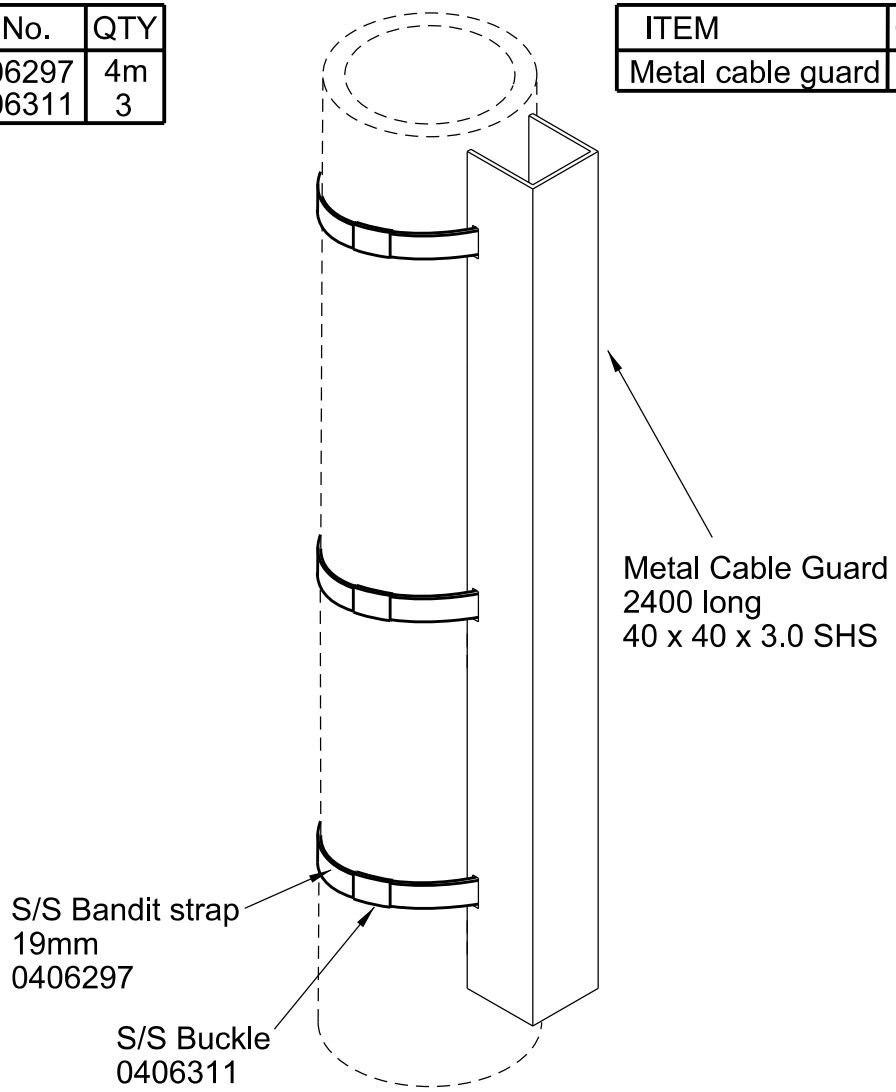

ASSEMBLY 906-5 CABLE GUARD TO STEEL POLE

A	ORIGINAL ISSUE	
B	22.07.19	

REFERENCE DRAWING ENERGEX: NIL

REFERENCE DRAWING ERGON: NIL

This document must not be reproduced in part or whole without written permission from ENERGEX or Ergon Energy

energex

© COPYRIGHT 2019 ENERGEX
ENERGEX Corporation Limited
ABN 40 078 849 055

ERGON ENERGY

© COPYRIGHT 2019 ERGON ENERGY
Ergon Energy Corporation Limited
ABN 50 087 646 062

HARD COPY UNCONTROLLED

		Date
Approved Ergon	A. Bletchly	09/08/19
Approved Energex	A. Bletchly	09/08/19
Checked	K. Slater	09/08/19
Drawn	T. Borg	18/07/16

LIGHTING
ASSEMBLIES
BANDIT STRAP TO POLE

EE DRWG NO: 1-2-906
EGX DRWG NO: 10500-A4-1-2-906

VOLUME	FOLDER	PAGE	ISSUE
1	2	906	0B

MATERIAL

ENERGEX SC	QTY 831-1	ERGON SC
Nil	- / 1	D. Purch
Nil	- / 1	D. Purch
Nil	- / 1	1010901
Nil	AR	1542919
Nil	- / 4	2427359
Nil	- / 1	0184880
Nil	- / 1	D. Purch

Note:
Position connector components with larger outside diameter above connector components with smaller outside diameter.

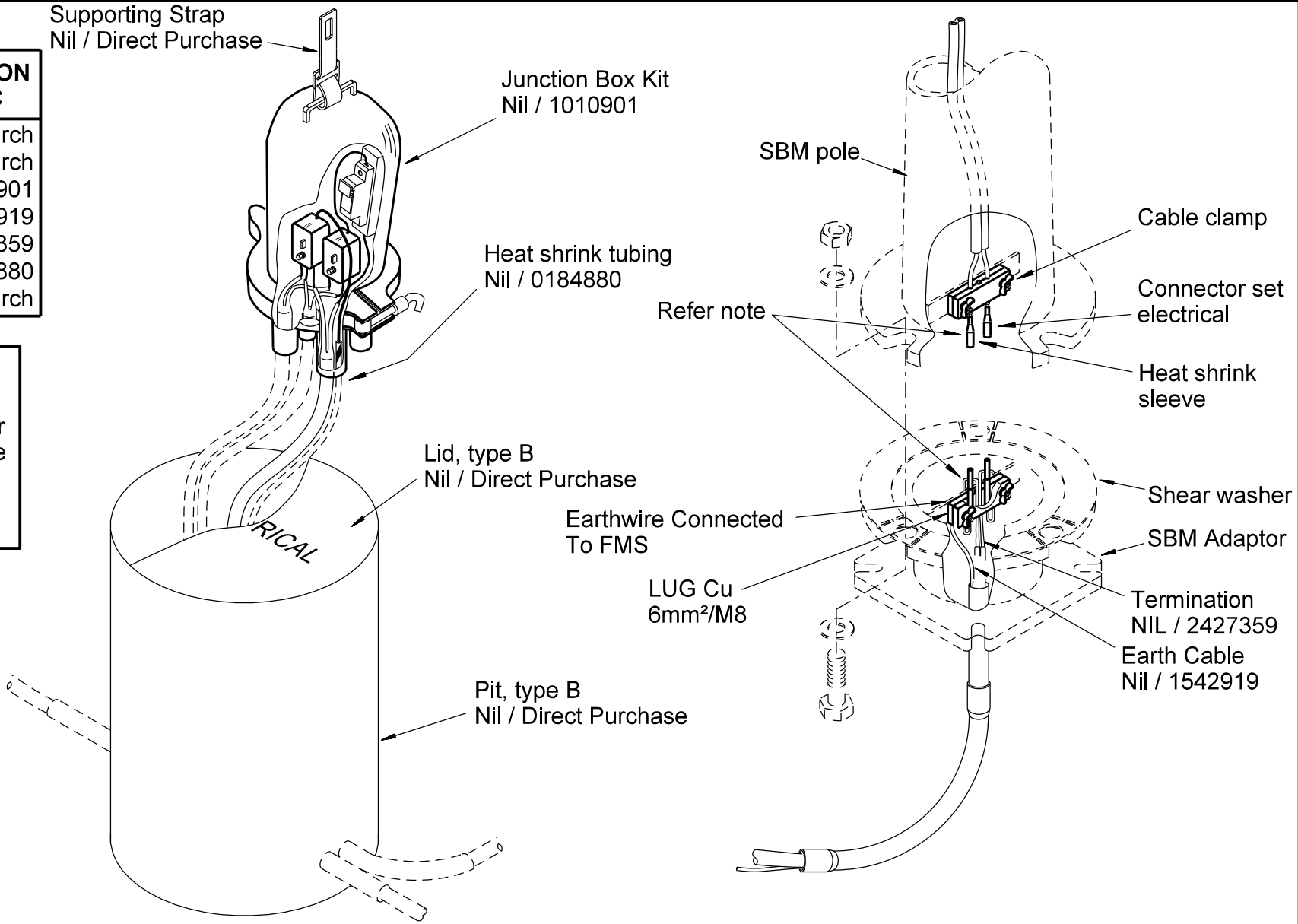

ASSEMBLY 907-1 CONNECTION SBM POLE TO PIT SINGLE PHASE - CONTAINS PIT TYPE B, LID & JUNCTION BOX KIT

A	ORIGINAL ISSUE

REFERENCE DRAWING ENERGEX: Nil

REFERENCE DRAWING ERGON: Nil

This document must not be reproduced in part or whole without written permission from ENERGEX or Ergon Energy

energex

© COPYRIGHT 2002 ENERGEX
ENERGEX Corporation Limited
ABN 40 078 849 055

ERGON ENERGY

© COPYRIGHT 2002 ERGON ENERGY
Ergon Energy Corporation Limited
ABN 50 087 646 062

HARD COPY UNCONTROLLED

		Date
Approved Ergon	C. Noel	19/04/17
Approved Energex	F. Zaini	19/04/17
Checked	P. Relf / A. Bletchly	01/04/17
Drawn	L. Burton / T. Borg	18/10/16

LIGHTING
ASSEMBLIES - ERGON ENERGY ONLY
MAJOR ROAD - TYPE B PIT
CONNECTION SBM POLE TO PIT SINGLE PHASE

EE DRWG NO: 1-2-907
EGX DRWG NO: 10500-A4-1-2-907

VOLUME	FOLDER	PAGE	ISSUE
1	2	907	0A

MATERIAL

ENERGEX SC	QTY 908-1	ERGON SC
Nil	- / 1	D. Purch
Nil	- / 1	D. Purch
Nil	- / 1	2433704
Nil	AR	1542919
Nil	- / 4	2427359
Nil	- / 1	0184880
Nil	- / 1	2400915
Nil	- / 1	0121008
Nil	- / 1	D. Purch

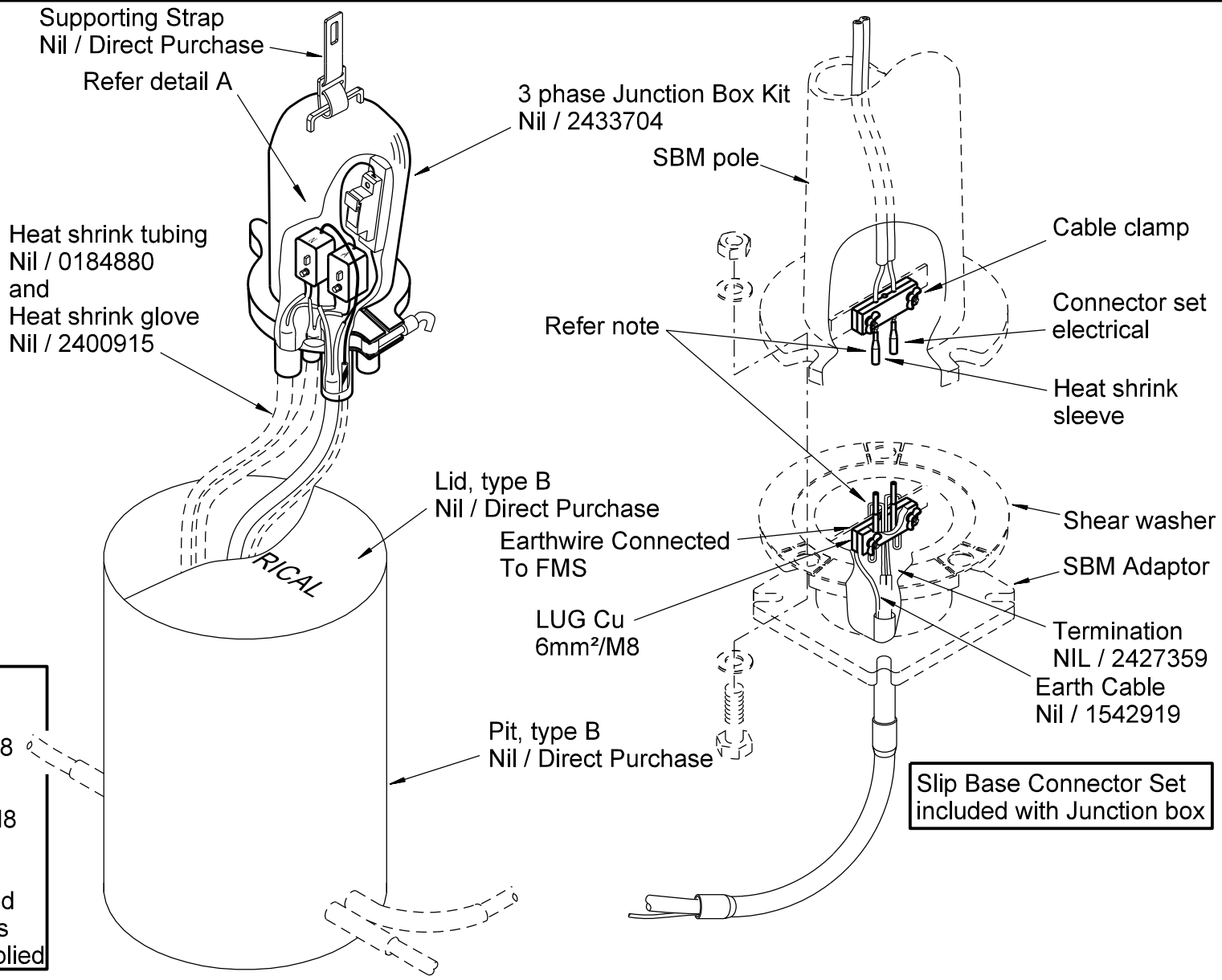

Note:
Position connector components with larger outside diameter above connector components with smaller outside diameter.

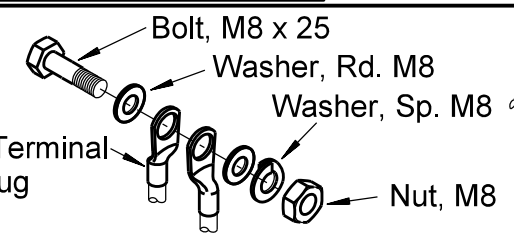

DETAIL 'A'

Unused phases are to be connected back to back. All exposed live parts are to have heat shrink (0121008) applied

ASSEMBLY 908-1 CONNECTION SBM POLE TO PIT THREE PHASE - CONTAINS PIT TYPE B, LID & JUNCTION BOX KIT

A	ORIGINAL ISSUE

REFERENCE DRAWING ENERGEX: NIL

REFERENCE DRAWING ERGON: NIL

This document must not be reproduced in part or whole without written permission from ENERGEX or Ergon Energy

energex

© COPYRIGHT 2002 ENERGEX
ENERGEX Corporation Limited
ABN 40 078 849 055

ERGON ENERGY

© COPYRIGHT 2002 ERGON ENERGY
Ergon Energy Corporation Limited
ABN 50 087 646 062

HARD COPY UNCONTROLLED

		Date
Approved Ergon	C. Noel	19/04/17
Approved Energex	F. Zaini	19/04/17
Checked	P. Relf / A. Bletchly	01/04/17
Drawn	L. Burton / T. Borg	25/10/16

LIGHTING
ASSEMBLIES - ERGON ENERGY ONLY
MAJOR ROAD - TYPE B PIT
CONNECTION SBM POLE TO PIT THREE PHASE

EE DRWG NO: 1-2-908
EGX DRWG NO: 10500-A4-1-2-908

VOLUME	FOLDER	PAGE	ISSUE
1	2	908	0A

MATERIAL

ENERGEX SC	QTY 909-1	ERGON SC
NIL	- / 1	2422657
NIL	- / 16	0104435

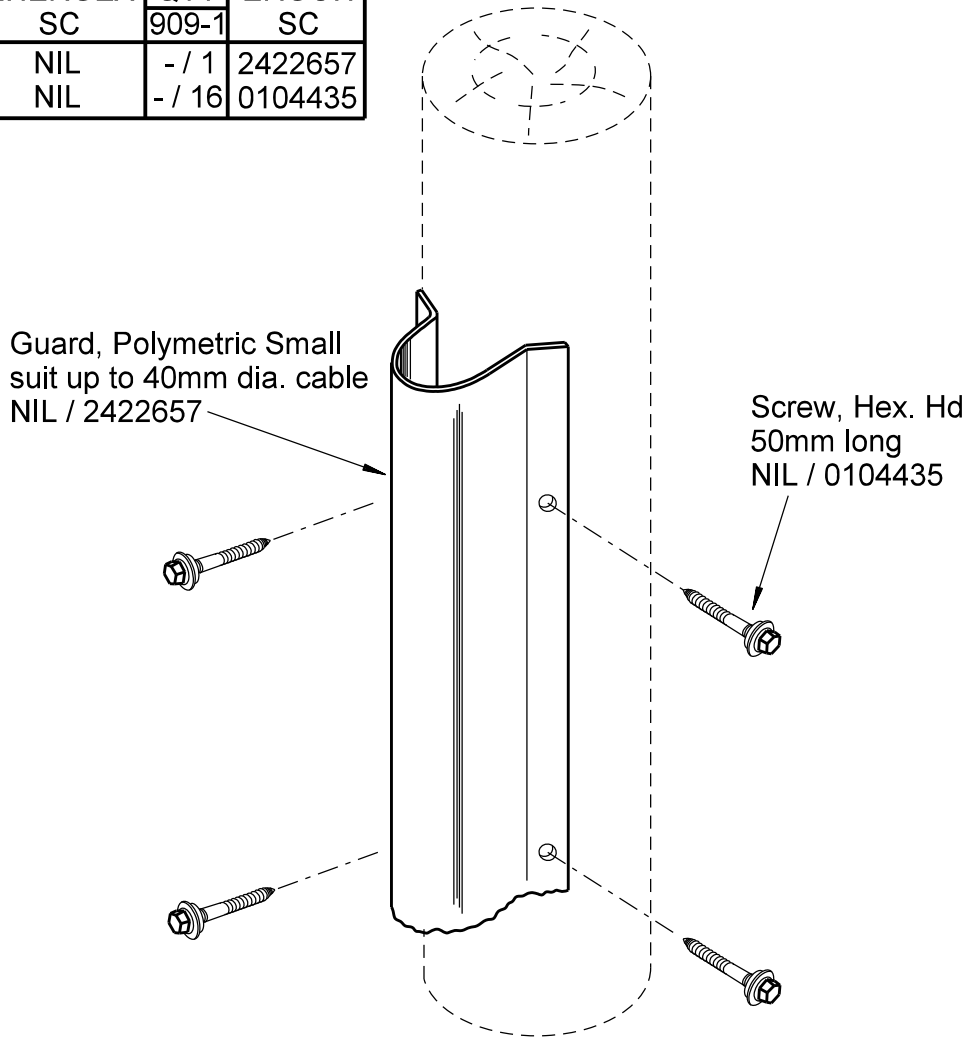

ASSEMBLY 909-1 GUARD POLYMERIC (SMALL) TO WOOD POLE

MATERIAL

ENERGEX SC	QTY 909-7	ERGON SC
NIL	- / 1	2406985
NIL	- / 6	1757622

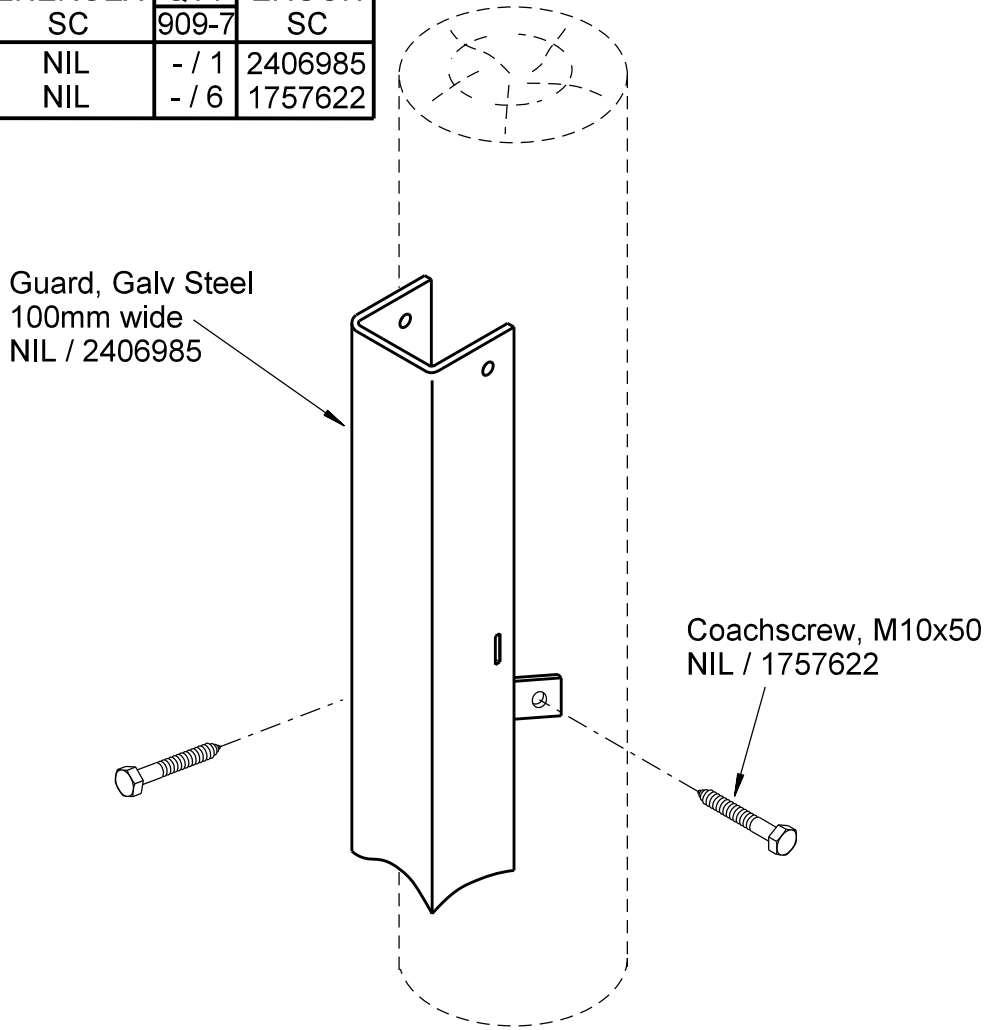

ASSEMBLY 909-7 GUARD METAL (100) TO WOOD POLE

A	ORIGINAL ISSUE	REFERENCE DRAWING ENERGEX: NIL	energex	ERGON ENERGY	Approved Ergon: C. Noel — Date: 19/04/17
		REFERENCE DRAWING ERGON: NIL	© COPYRIGHT 2002 ENERGEX ENERGEX Corporation Limited ABN 40 078 849 055	©COPYRIGHT 2002 ERGON ENERGY Ergon Energy Corporation Limited ABN 50 087 646 062	Approved Energex: F. Zaini — Date: 19/04/17
		This document must not be reproduced in part or whole without written permission from ENERGEX or Ergon Energy	HARD COPY UNCONTROLLED		Checked: P. Relf / A. Bletchly — Date: 01/04/17
					Drawn: L. Burton / T. Borg — Date: 25/10/16

LIGHTING
ASSEMBLIES - ERGON ENERGY ONLY
CABLE GUARD TO POLE

EE DRWG NO: 1-2-909	VOLUME	FOLDER	PAGE	ISSUE
EGX DRWG NO: 10500-A4-1-2-909	1	2	909	0A

MATERIAL

ENERGEX SC	QTY 910-1	ERGON SC
NIL	AR	0184880
NIL	- / 1	2427359
NIL	- / 1	0158076
NIL	AR	1313013

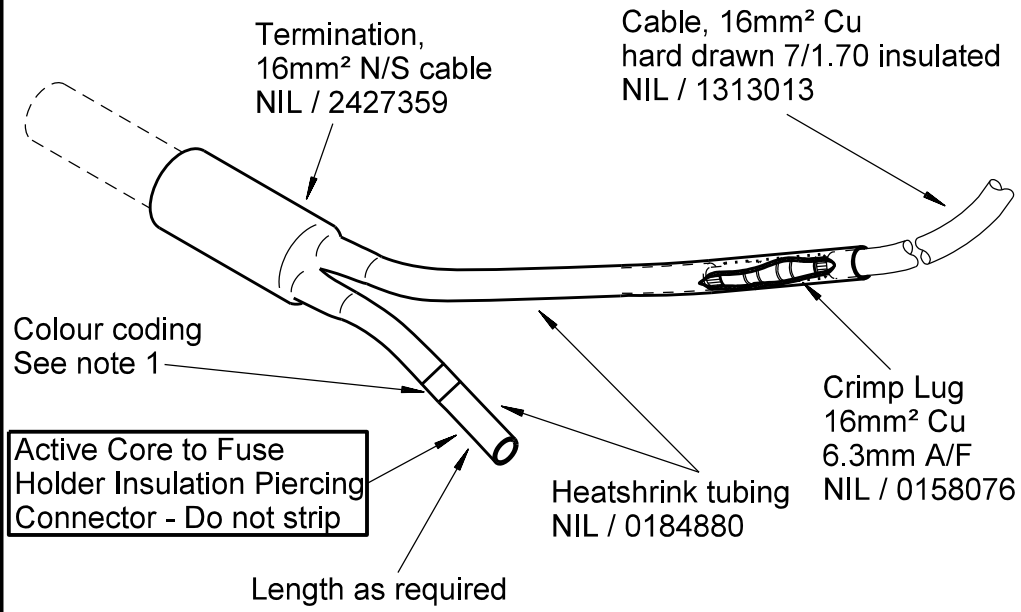

Notes:

1. Mark active over heatshrink with red electrical tape.
2. A/F = Across flat dimension of hexagonal crimping dies.
3. Crimping tool requirement:
   Utilux - 22 tonne minimum
   Cabac - 23 tonne minimum

ASSEMBLY 910-1 TERMINATION 16mm² N/S CABLE

MATERIAL

ENERGEX SC	QTY 910-5	ERGON SC
NIL	- / 3m	1420045

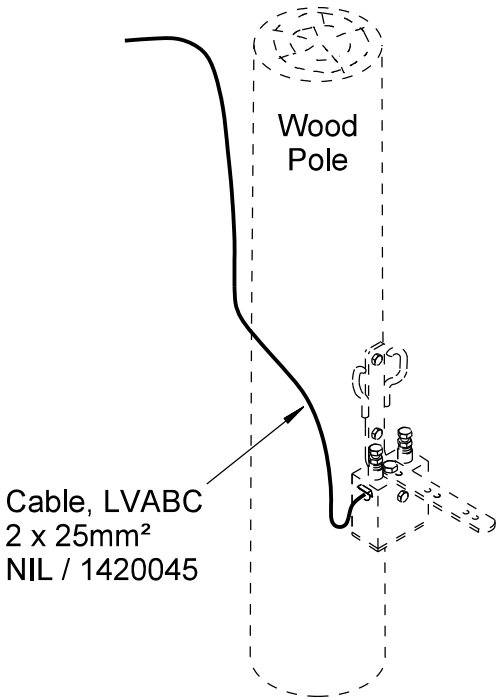

ASSEMBLY 910-5 BRIDGING CABLE 25MM² LVABC

A	ORIGINAL ISSUE

REFERENCE DRAWING ENERGEX: NIL

REFERENCE DRAWING ERGON: 5 82 8089 1

This document must not be reproduced in part or whole without written permission from ENERGEX or Ergon Energy

energex

© COPYRIGHT 2002 ENERGEX
ENERGEX Corporation Limited
ABN 40 078 849 055

ERGON ENERGY

© COPYRIGHT 2002 ERGON ENERGY
Ergon Energy Corporation Limited
ABN 50 087 646 062

HARD COPY UNCONTROLLED

		Date
Approved Ergon	C. Noel	19/04/17
Approved Energex	F. Zaini	19/04/17
Checked	P. Relf / A. Bletchly	01/04/17
Drawn	L. Burton / T. Borg	15/12/16

LIGHTING

ASSEMBLIES - ERGON ENERGY ONLY
TERMINATION 16mm² N/S CABLE
TO SERVICE POLE

EE DRWG NO: 1-2-910
EGX DRWG NO: 10500-A4-1-2-910

VOLUME	FOLDER	PAGE	ISSUE
1	2	910	0A

MATERIAL

ENERGEX SC	QTY							ERGON SC
	913-7	913-8	913-9	913-10	913-11	913-12	913-13	
2467041	1 / 1							2467041
2467058		1 / 1						2467058
2467066			1 / 1					2467066
2467074				1 / 1				2467074
2467090					1 / 1			2467090
2467108						1 / 1		2467108
2467116							1 / 1	2467116
05502		1 / 1	1 / 1	1 / 1	1 / 1	1 / 1	1 / 1	1184026

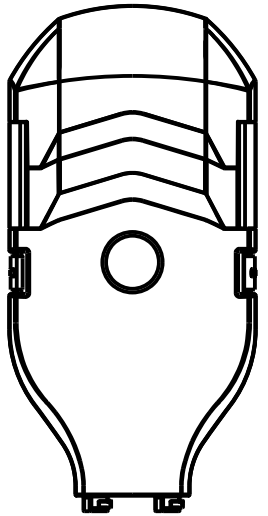

L50 Aeroscreen (LSS)
2467041

L50 Aeroscreen (Philips)
2467058
L90 Aeroscreen (Philips)
2467066
L80 Aeroscreen (Philips)
2467074
L170 Aeroscreen (Philips)
2467090
L270 Aeroscreen (Philips)
2467108
L240 Aeroscreen (Philips)
2467116

PE Cell - Nema
High Rating
05502 / 1184026

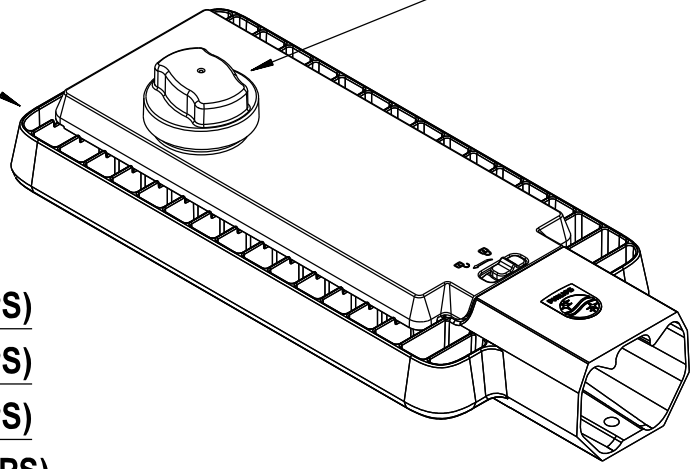

ASSEMBLY 913-7 MAJOR ROAD LED LUMINAIRE L50 AEROSCREEN (LSS)

ASSEMBLY 913-8 MAJOR ROAD LED LUMINAIRE L50 AEROSCREEN (PHILIPS)

ASSEMBLY 913-9 MAJOR ROAD LED LUMINAIRE L90 AEROSCREEN (PHILIPS)

ASSEMBLY 913-10 MAJOR ROAD LED LUMINAIRE L80 AEROSCREEN (PHILIPS)

ASSEMBLY 913-11 MAJOR ROAD LED LUMINAIRE L170 AEROSCREEN (PHILIPS)

ASSEMBLY 913-12 MAJOR ROAD LED LUMINAIRE L270 AEROSCREEN (PHILIPS)

ASSEMBLY 913-13 MAJOR ROAD LED LUMINAIRE L240 AEROSCREEN (PHILIPS)

A	ORIGINAL ISSUE	REFERENCE DRAWING ENERGEX: NIL	energex	ERGON ENERGY	Approved Ergon: A. Bletchly 01/03/19
B	04.09.18	REFERENCE DRAWING ERGON: NIL			Approved Energex: A. Bletchly 01/03/19
					Checked: K. Slater 01/03/19
					Drawn: L. Burton / T. Borg 17/04/18

This document must not be reproduced in part or whole without written permission from ENERGEX or Ergon Energy

© COPYRIGHT 2019 ENERGEX
ENERGEX Corporation Limited
ABN 40 078 849 055

©COPYRIGHT 2019 ERGON ENERGY
Ergon Energy Corporation Limited
ABN 50 087 646 062

HARD COPY UNCONTROLLED

LIGHTING
ASSEMBLIES
MAJOR ROAD
LED LUMINAIRES

EE DRWG NO: 1-2-913
EGX DRWG NO: 10500-A4-1-2-913

VOLUME	FOLDER	PAGE	ISSUE
1	2	913	0B

MATERIAL

ENERGEX SC	QTY 914-1	914-2	914-3	914-4	914-5	914-6	914-7	914-8	914-9	ERGON SC
05502	1 / 1	1 / 1	1 / 1							1184026
2467413	1 / 1									2467413
2467421		1 / 1								2467421
2467439			1 / 1							2467439
2467447				1 / 1						2467447
2467454					1 / 1					2467454
2467462						1 / 1				2467462
2467470							1 / 1			2467470
2467488								1 / 1		2467488
2467496									1 / 1	2467496

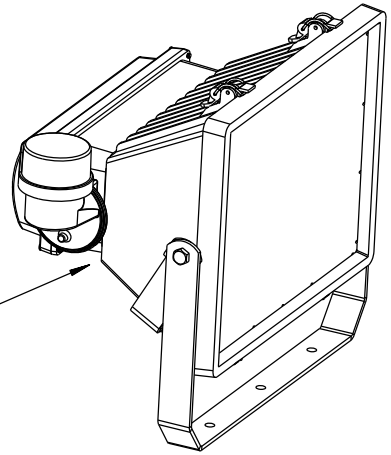

Gerard Sylflood Symmetric
2467447 (S150)
2467454 (S250)
2467462 (S400)
2467470 (H150)
2467488 (H250)
2467496 (H400)

Nema PE Cell
05502 / 1184026

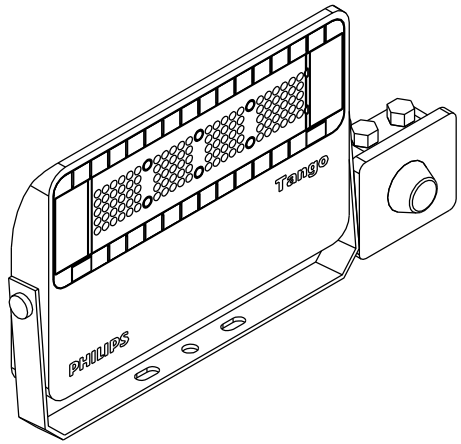

Philips Tango G3 Small

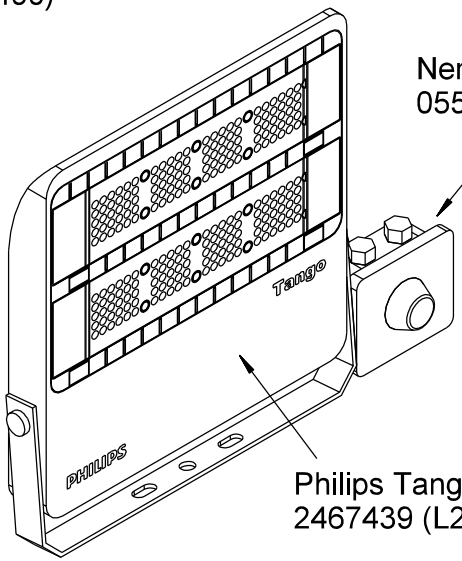

Philips Tango G3 Medium
2467439 (L200)

Philips Tango G3 Small
2467413 (L70)
2467421 (L100)

ASSEMBLY 914-1 WATCHMAN FLOODLIGHT L70
ASSEMBLY 914-2 WATCHMAN FLOODLIGHT L100
ASSEMBLY 914-3 WATCHMAN FLOODLIGHT L200
ASSEMBLY 914-4 WATCHMAN FLOODLIGHT S150
ASSEMBLY 914-5 WATCHMAN FLOODLIGHT S250
ASSEMBLY 914-6 WATCHMAN FLOODLIGHT S400
ASSEMBLY 914-7 WATCHMAN FLOODLIGHT H150
ASSEMBLY 914-8 WATCHMAN FLOODLIGHT H250
ASSEMBLY 914-9 WATCHMAN FLOODLIGHT H400

A	ORIGINAL ISSUE	REFERENCE DRAWING ENERGEX: NIL	energex	ERGON ENERGY	Approved Ergon: A. Bletchly 01/03/19	**LIGHTING** ASSEMBLIES WATCHMAN FLOODLIGHT
		REFERENCE DRAWING ERGON: NIL	© COPYRIGHT 2019 ENERGEX ENERGEX Corporation Limited ABN 40 078 849 055	© COPYRIGHT 2019 ERGON ENERGY Ergon Energy Corporation Limited ABN 50 087 646 062	Approved Energex: A. Bletchly 01/03/19	
		This document must not be reproduced in part or whole without written permission from ENERGEX or Ergon Energy	HARD COPY UNCONTROLLED		Checked: K. Slater 01/03/19	EE DRWG NO: 1-2-914
					Drawn: T. Borg 03/12/18	EGX DRWG NO: 10500-A4-1-2-914

VOLUME	FOLDER	PAGE	ISSUE
1	2	914	0A

MATERIAL

ENERGEX SC	QTY 915-1	ERGON SC
00209	1 / 1	1703816
01045	2 / 2	1777569
00684	3 / 3	1757894
2469252	1 / 1	2469252
01074	1 / 1	1779158
01044	3 / 3	1777542

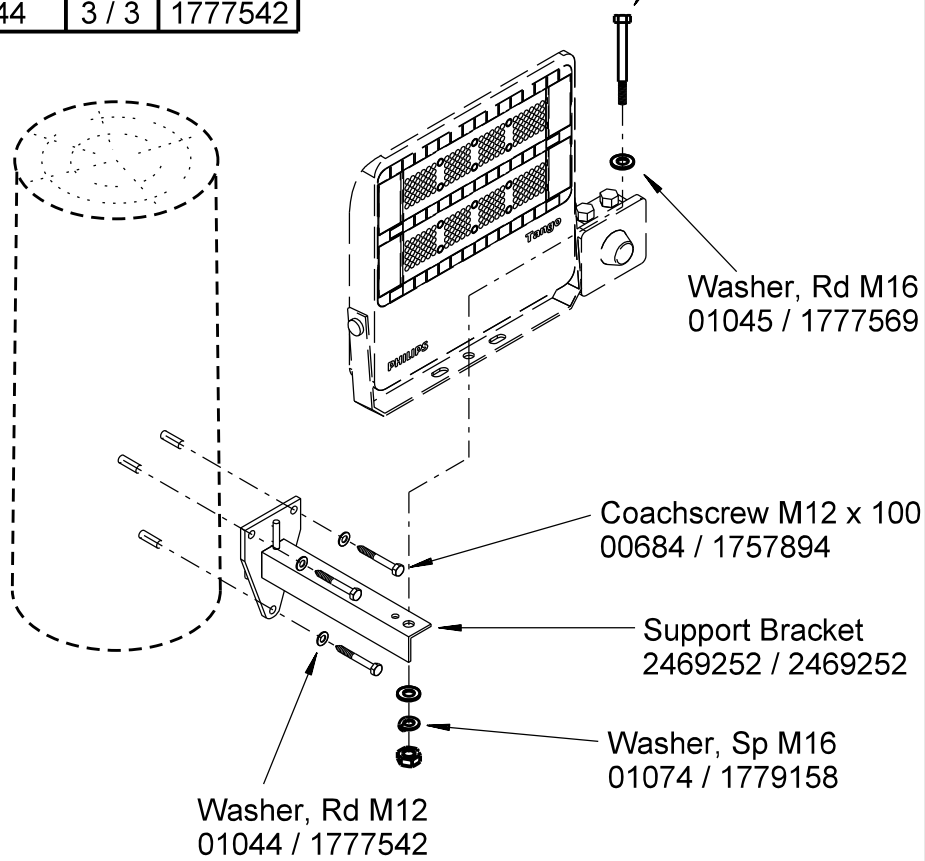

ASSEMBLY 915-1 LED WATCHMAN TO WOOD POLE

MATERIAL

ENERGEX SC	QTY 915-2	ERGON SC
00209	1 / 1	1703816
01045	2 / 2	1777569
2469252	1 / 1	2469252
01074	1 / 1	1779158
02483	3 / 3	0406311
02476	3 / 3	0406297

NOTE:
All bands to be double wrapped

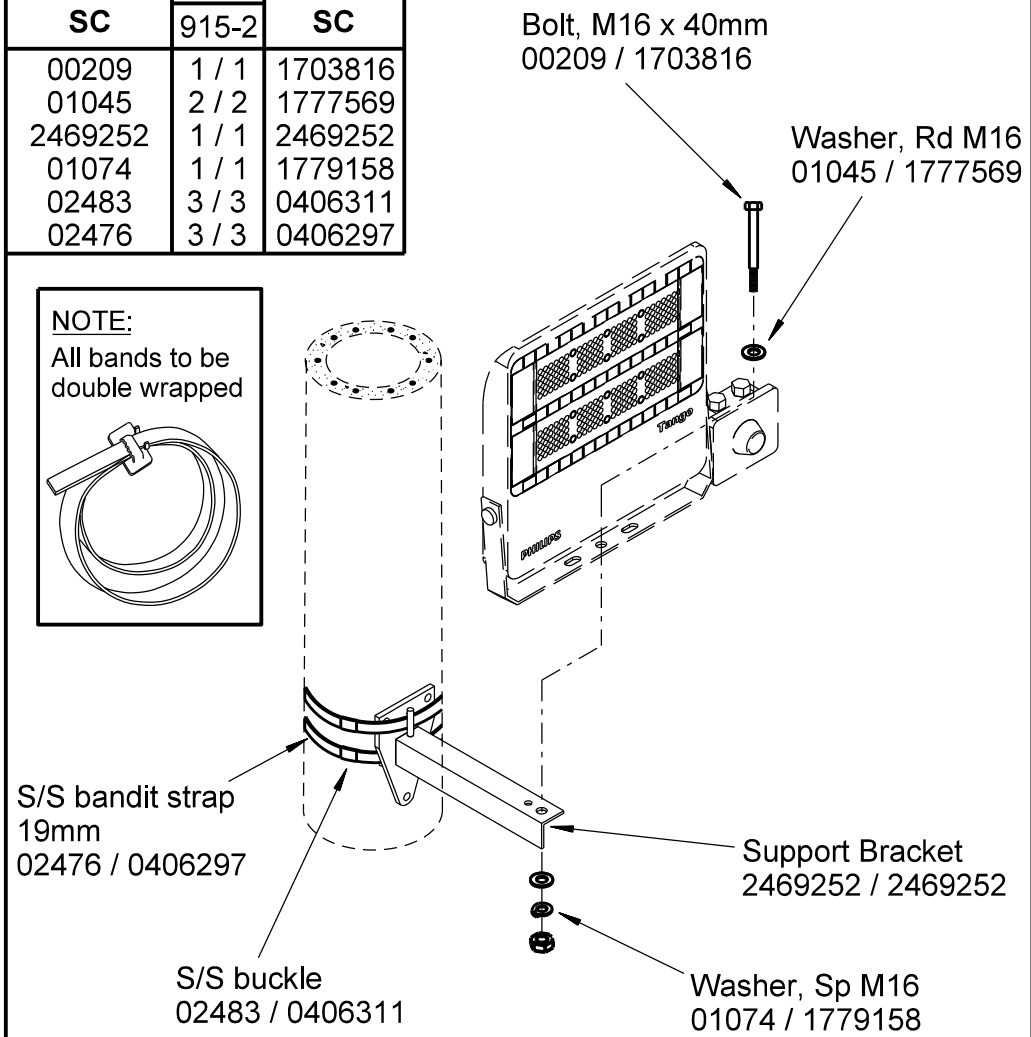

ASSEMBLY 915-2 LED WATCHMAN TO STEEL / CONCRETE POLE

A	ORIGINAL ISSUE	REFERENCE DRAWING ENERGEX: NIL REFERENCE DRAWING ERGON: NIL	energex	ERGON ENERGY	Approved Ergon: A. Bletchly 01/03/19 Approved Energex: A. Bletchly 01/03/19 Checked: K. Slater 01/03/19 Drawn: L. Burton / T. Borg 27/09/18

This document must not be reproduced in part or whole without written permission from ENERGEX or Ergon Energy

© COPYRIGHT 2019 ENERGEX
ENERGEX Corporation Limited
ABN 40 078 849 055

©COPYRIGHT 2019 ERGON ENERGY
Ergon Energy Corporation Limited
ABN 50 087 646 062

HARD COPY UNCONTROLLED

LIGHTING
ASSEMBLIES
WATCHMAN FLOODLIGHT
TO CONCRETE POLE

EE DRWG NO: 1-2-915	VOLUME	FOLDER	PAGE	ISSUE
EGX DRWG NO: 10500-A4-1-2-915	1	2	915	0A

MATERIAL

ENERGEX SC	QTY 916-1	ERGON SC
00166	1 / 1	1702887
00164	2 / 2	1702852
01043	6 / 6	1777534
00684	3 / 3	1757894
2469252	1 / 1	2469252
2469260	1 / 1	2469260
01072	3 / 3	1779154
01044	3 / 3	1777542

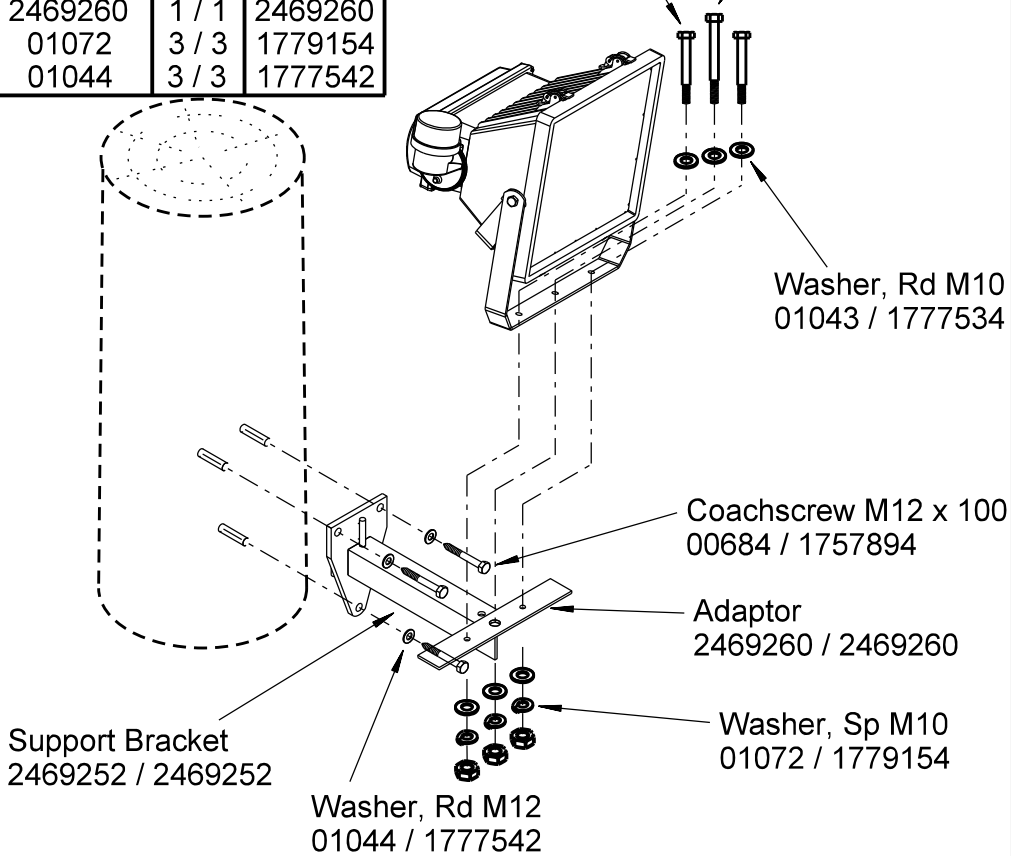

ASSEMBLY 916-1 WATCHMAN FLOODLIGHT TO WOOD POLE

MATERIAL

ENERGEX SC	QTY 916-2	ERGON SC
00166	1 / 1	1702887
00164	2 / 2	1702852
01043	6 / 6	1777534
2469252	1 / 1	2469252
2469260	1 / 1	2469260
01072	3 / 3	1779154
02483	2 / 2	0406311
02476	3 / 3	0406297

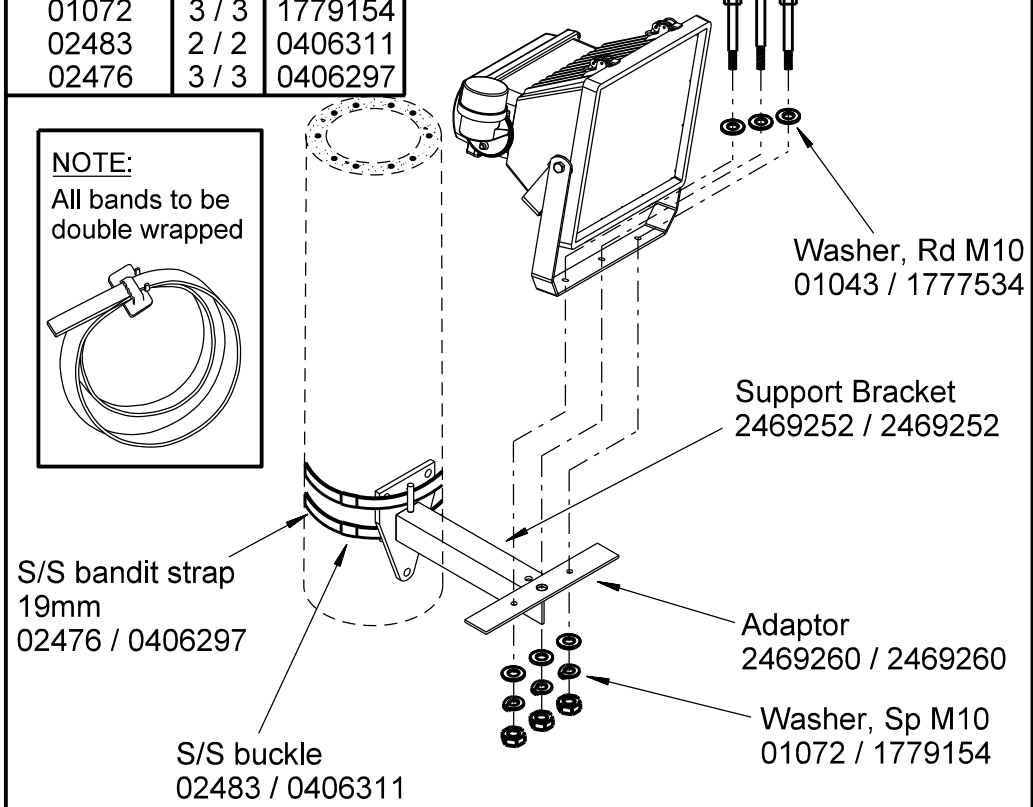

ASSEMBLY 916-2 WATCHMAN FLOODLIGHT TO STEEL / CONCRETE POLE

A	ORIGINAL ISSUE	REFERENCE DRAWING ENERGEX: NIL	energex	ERGON ENERGY	Approved Ergon: A. Bletchly — Date: 09/08/19
B	23.07.19	REFERENCE DRAWING ERGON: NIL	© COPYRIGHT 2019 ENERGEX ENERGEX Corporation Limited ABN 40 078 849 055	© COPYRIGHT 2019 ERGON ENERGY Ergon Energy Corporation Limited ABN 50 087 646 062	Approved Energex: A. Bletchly — Date: 09/08/19
		This document must not be reproduced in part or whole without written permission from ENERGEX or Ergon Energy	HARD COPY UNCONTROLLED		Checked: K. Slater — Date: 09/08/19
					Drawn: T. Borg — Date: 03/12/18

LIGHTING
ASSEMBLIES
WATCHMAN FLOODLIGHT
TO WOOD / STEEL / CONCRETE POLE

EE DRWG NO: 1-2-916
EGX DRWG NO: 10500-A4-1-2-916

VOLUME	FOLDER	PAGE	ISSUE
1	2	916	0B